Cameras

(K.Kraus Vol.1 § 3.1 - 3.4 - 3.6 - 3.7) not in this order

Airborne and terrestrial analogue sensors

So far : theory based on idealized models

Pin hole camera

Exact central projection

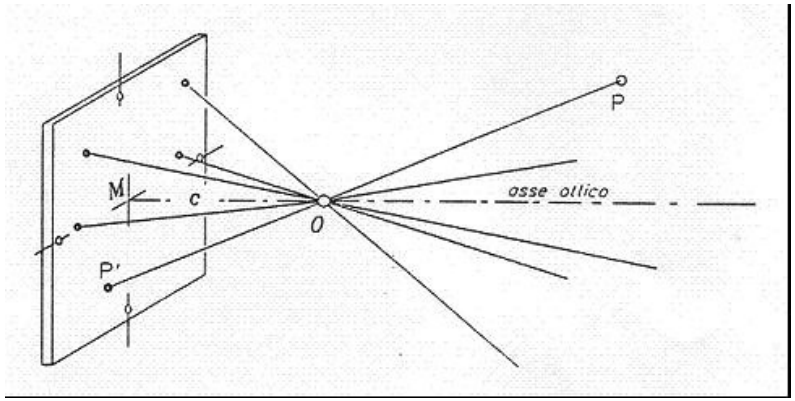

Metric photograph

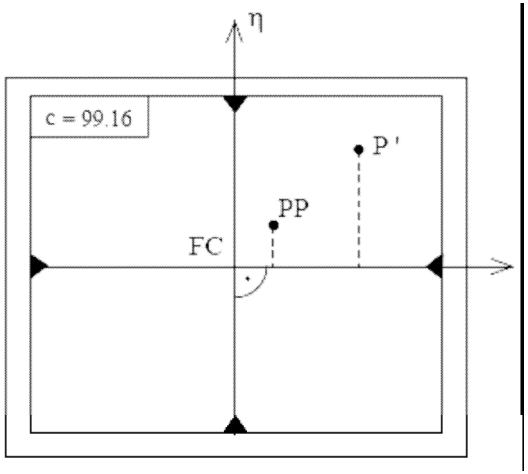

Elements of Inner Orientation

Now: real instruments

Distorsions in lenses, films, etc…..

Airborne and terrestrial analogue sensors

Airborne cameras

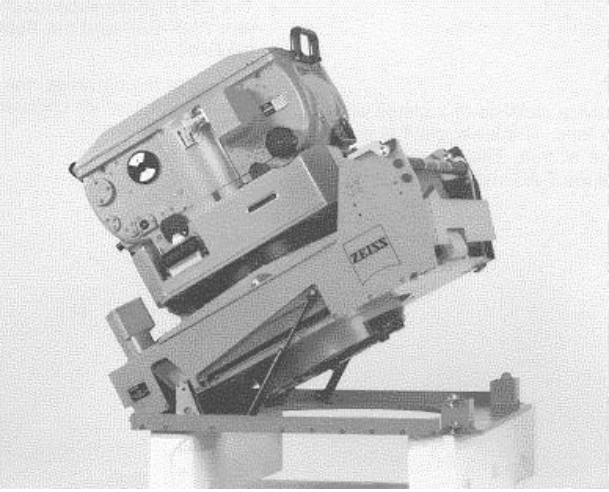

Big format photograms (fixed)
Big blocks in normal geometry
Photos taken in motion
Resistant to high stress (pressure and temperature jumps,vibrations)

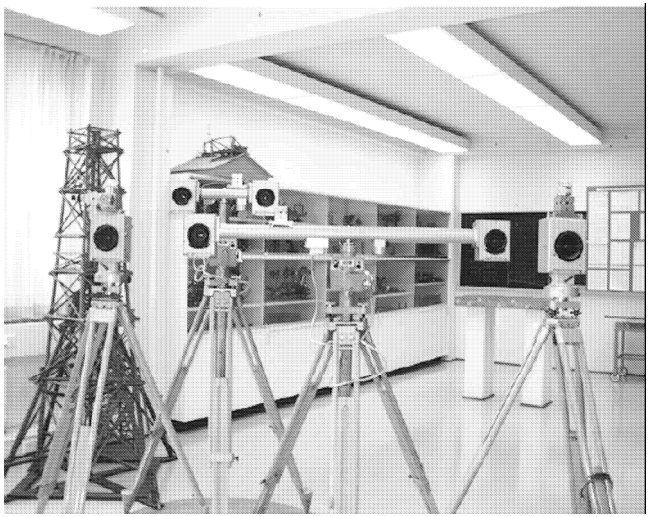

Terrestrial cameras

Various medium formats
Photos taken with a still support
Normal or convergent geometry
Stereometric cameras (bi-cameras)

CAMERA CLASSIFICATIONS

• METRIC CAMERAS developed for photogrammetric surveys, with stable and measured I.O.

airborne and terrestrial

• SEMIMETRIC CAMERAS i.o. not completely stable

• NON METRIC CAMERAS (amateur, for low accuracy survey)

Close range

DIFFERENT METHODS FOR INNER ORIENTATION DETERMINATION :

• FIDUCIAL MARKS fixed on the image when is taken

airborne and terrestrial

• RESEAUX CAMERAS : a thin glass plate bearing a calibrated grid of regularly spaced crosses is imaged in every photo

• FRAME CAMERAS : sharp image edge

close range

Terrestrial cameras

Cameras in fixed positions ➔ E.O parameters once measured by field survey

INT.ORIENTATION

Fiducial marks	metric
Grid of targets	semi-metric
Photo frame	non-metric

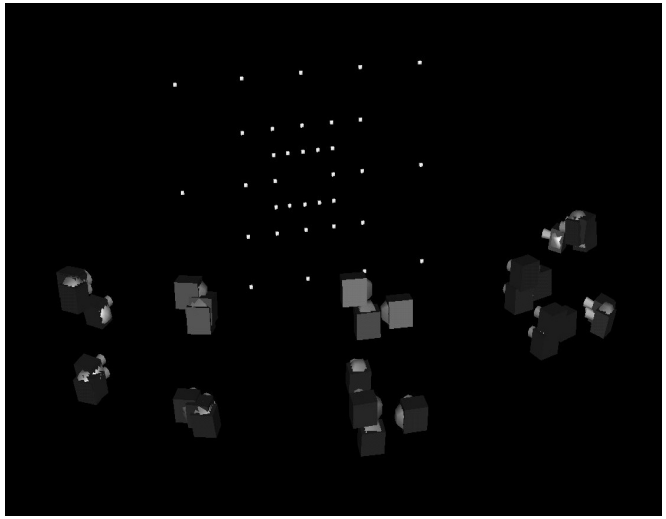

Easily levelled on a tripod

Interchangeable with theodolite and targets

Horizontal or vertical tilt possibility at fixed angles

Terrestrial metric cameras

Similar to airborne cameras

- fiducial marks (4)
- film flattening device (vacuum or pressure-plate)
- large format
- high quality optics

possible stereometric

- Examples:

WILD P31 (102x127 mm)

Zeiss UMK (130x180 mm)

Stereometric cameras can be
=
normal case

AA

Terrestrial semi-metric cameras

Have a calibrated objective mounted on amateur body

Professional cameras with medium (60x60mm) format adapted to photogrammetric use

- Reseaux (9 o 121 crosses) example: Rollei 6006

Defines the image reference system

Allows corrections of film deformations

Image coordinates are calibrated for each photogram

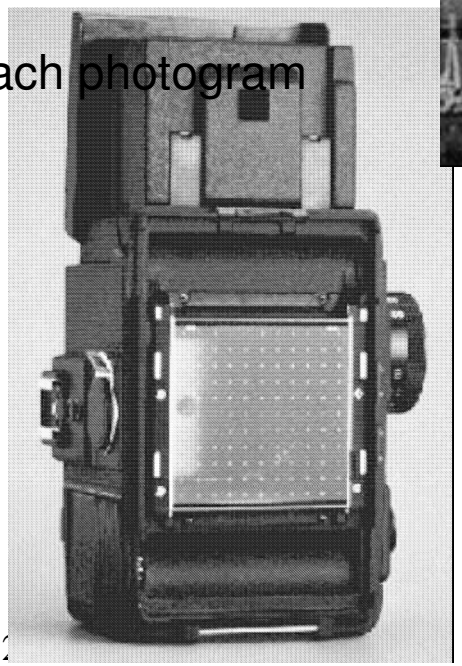

- Focusing at fixed distances
- Good quality optics
- Laboratory calibration certificate
- Today also in digital version

Terrestrial non-metric cameras
or
amateur cameras

Common cameras

Can be used in photogrammetry only after self-calibration procedure of all Orientation parameters (Int. and Ext.)

AERIAL CAMERAS

Final requirements

- Exact geometry
- Image sharpness
- High resolution

Central shutter

Working condition

Aerial cameras are mounted into an aircraft

Suppression of radio-interference, work with 28V DC and follow safety flight regulations

- Big dimensions :
about 60x60x50 cm, weight about 70-90 kg

- Big format film **23 cm x 23 cm (9” x 9”)** and magazine with 120-150m film (500-600 photograms)

PRINCIPAL REQUIREMENTS IN AERIAL CAMERAS

• **fixed principal distance c**
Photos are taken at big distances (100m - Nx1000m) therefore there is no problem with focusing distance: the objective is focused at infinity.

• **fiducial marks** (reperes) 4 or, better, 8, on the image plane (lightened) + 1 asymetrically placed inside or at the edge of the image, for the automatic determination of image position

accurate construction of each component (optics, mechanical parts, for.ex. central shutters)

• **automated device** for flattening of the film, motion and drift corrections

• I.O. parameters by **lab-calibration** and components **stability** respect to vibrations, big temperature changes, thermal expansion

AERIAL CAMERAS

Photogrammetric cameras classification according **<u>field angle</u>** of the objectivs :

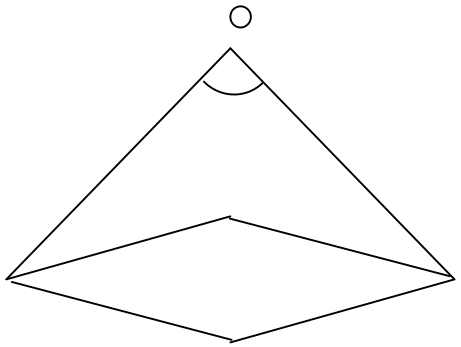

Angle with vertex in projection center O and rays pointing to the ends of image diagonal

For the format 230 mm x 230 mm:

	Reduced Normal	Normal N	WideAngle W	Super - WideAngle SW
Field angle	30°	60°	90°	120°
Principal distance c (mm)	600	300	150	90

Big scale survey (ex.urban areas, orthoimages)

Medium and large scale (more commonly used)

Small scale

AERIAL CAMERAS

c, Z, B and photograms overlapping are geometrically constrained each other

	Reduced Normal	Normal N	WideAngle W	Super - WideAngle SW
Field angle	**30°**	**60°**	**90°**	**120°**
Principal distance c (mm)	**600**	**300**	**150**	**90**
B/Z for 60% overlapping	**1:6.6**	**1:3.3**	**1:1.6**	**1:0.95**

Auxiliary data imaged with the photogram , digital, or analogical

To reconstruct Int.Or. each photogram must bear:

- **fiducial marks** (to fix the principal point position)
- **the principal distance**
- **camera number (numero di matricola)** referring to the calibration certificate

And many others :

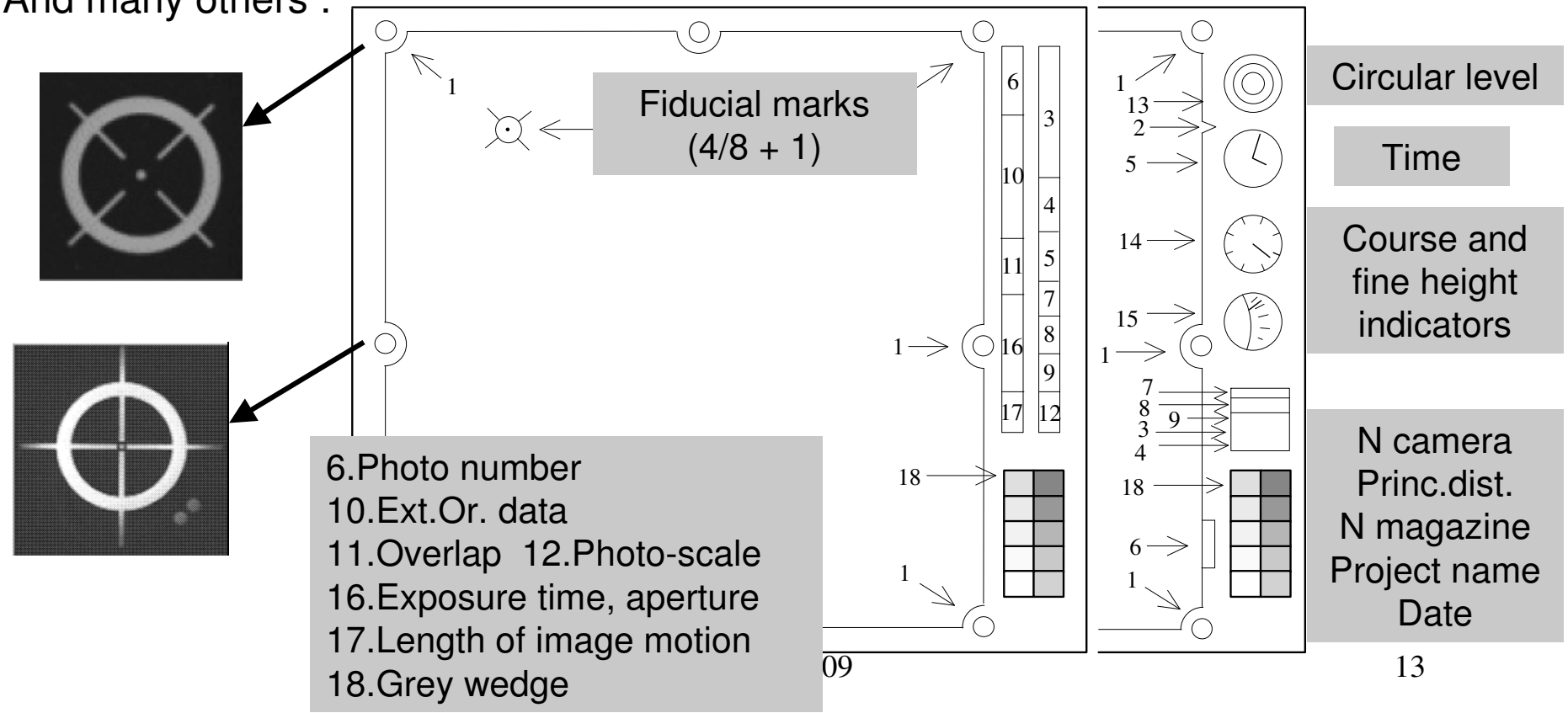

Schematic diagram of an aerial camera

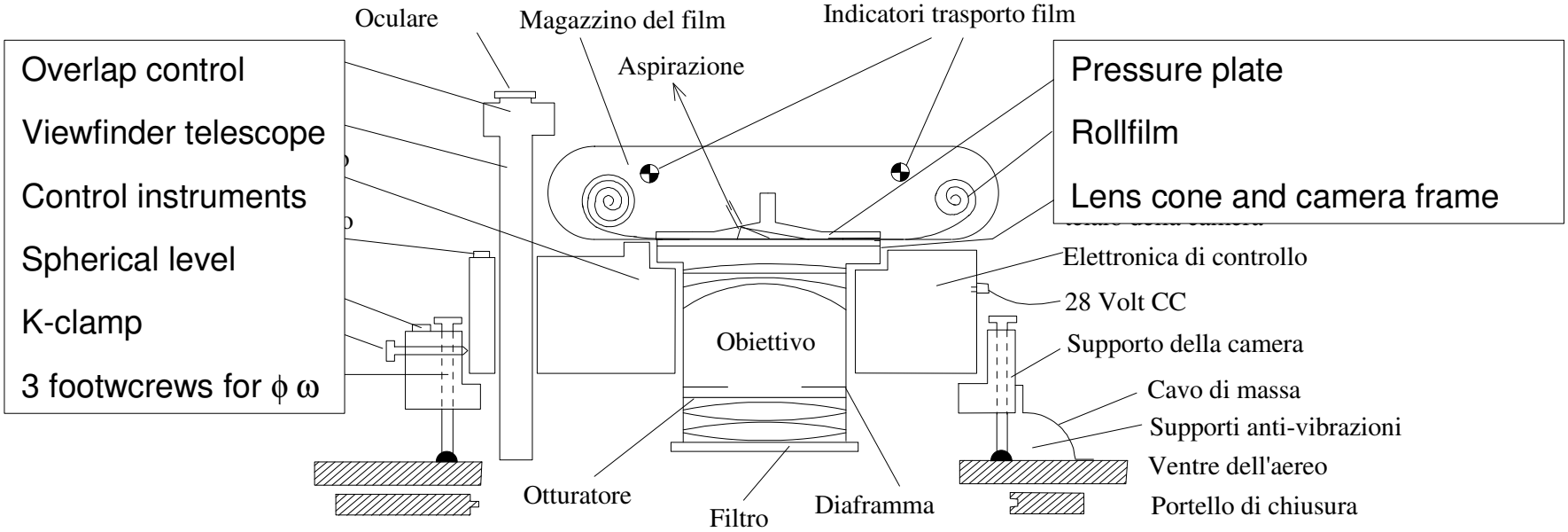

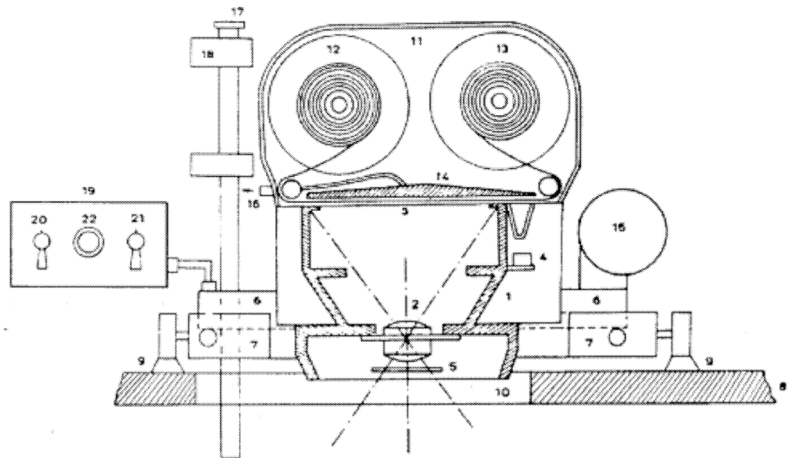

Auxiliary data imaged on the photogram

Geographic coordinates ϕ, λ
Projection center height
Angles ω, ϕ
Course and drift

If present: GPS/INS E.O. data

FURTHER REQUIREMENTS IN AERIAL CAMERAS

E.O. requirements

Possibility of reconstruct E.O. :

The camera

•Can be levelled with footscrew or gyros to mantain tilt angles ω and $\varphi < \pm 5$gon

•Can be rotated around its vertical axis to compensate drift (to be aligned to the ground track of the aircraft) $\kappa < \pm 3$gon ➔ 3cm in 23cm images

•Navigation equipment to held the flying track, and the flying height

• overlap regulator (to mantain overlapping also in montainous terrains) linked with automatic computation of ‘scatto’o ‘intervallo di scatto’

GPS/INS data : very important for navigation in poorly mapped regions

- can have a forward motion compensation device
- must have a central shutter so that exterior orientation is uniform over the whole image This moreover allows to use shorter exposure time (1/150 ÷ 1/1000 s and less)
- The flash exposure of the fiducial marks must coincide with the mean moment of exposure (mean time of shutter opening)
- The film must be kept flat with a vacuum pressure flattening device
- Must be built with materials having the same termal expansion coefficient.

Pilot - Co-pilot - Photographer
But now many operations are remote-controlled or automated, and the pilot alone can operate the camera system.

Minimum interval between two successive shots : min cycle time 2 sec,this limits the base length.
The camera can operate automatically, controlled by the overlapping regulator, or manually.
There is a shot signal for the pilot to leave time to correct track, drift and attitude before the next shot

For checking drift and position are used:

- viewfinder (WILD)
- overlap control (ZEISS)
- special pointers remote-controlled by navigator-photographer

In the viewfinder the operator sees the apparent motion of the ground and:

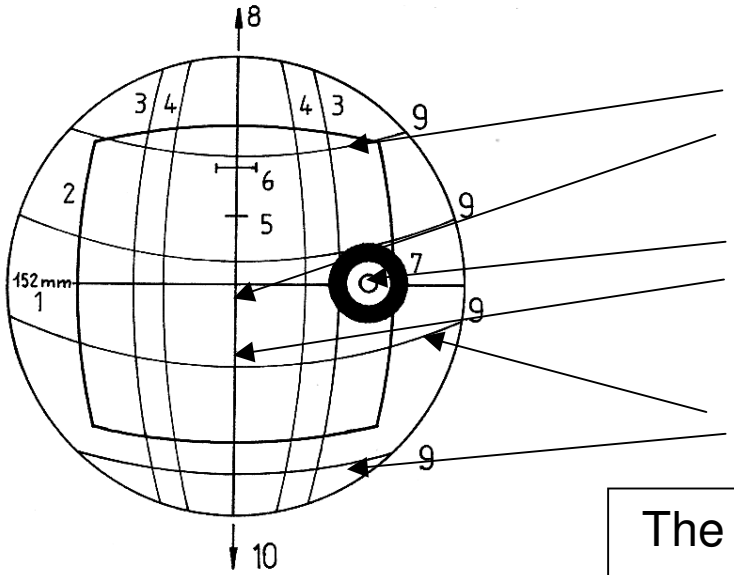

Image frame (inquadratura)
Target point

Spherical level
Central line to check drift angle

Moving lines for overlap regulator

The lines should move at the same apparent speed of the ground. In this case, the operator control the preset overlap regulator along track.

Over mountainous areas apparent speed of motion can vary widely because of great flying height variations. Moving lines extends over the full field of view. (overlapping must be maintained in the highest parts)

The central line is used to check and adjust the drift angle, caused by wind velocity, of the camera, by observing the apparent motion of a point close to this line.

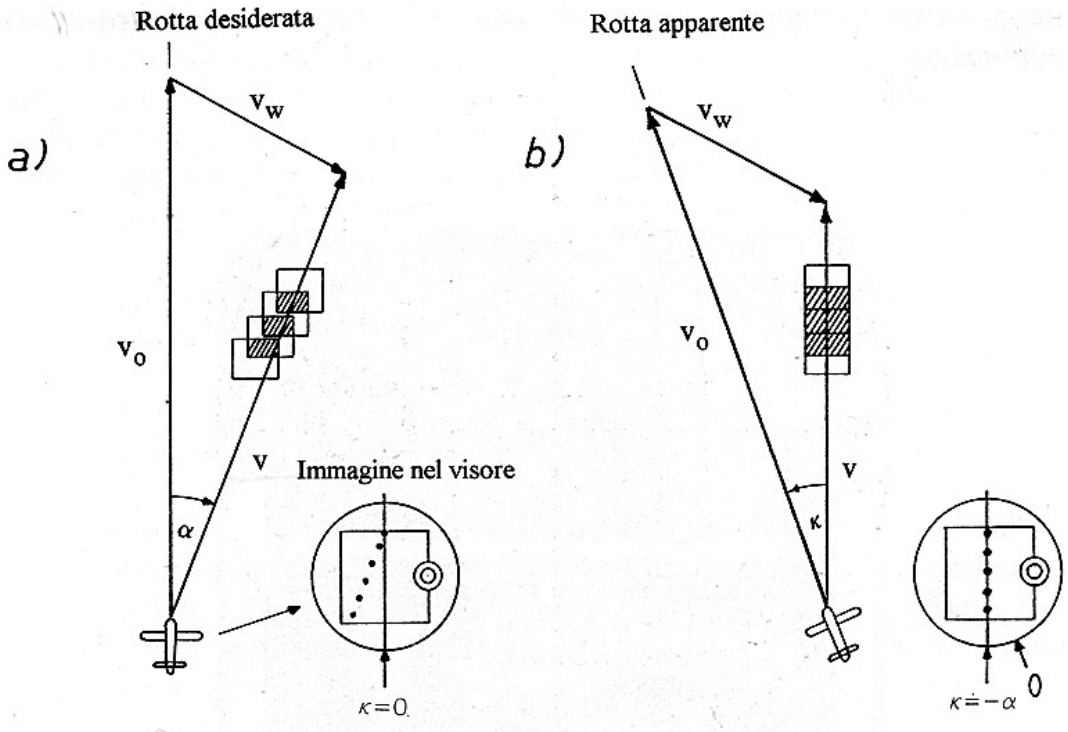

The aircraft flies along its nominal course, the side wind drives it along a different course (drift α)
In the viewfinder a central point doesn't stay on the central line

The course is corrected by an angle k= -α, and the camera is rotated on the aircraft of α . The real course thus coincides with the planned direction and in the viewfinder a central point lies on the central line

ANALOGUE AIRBORNE CAMERAS

CAMERE METRICHE AEREE

ZI-Imaging RMK Top

Leica RC 30

	ZI-Imaging [1]	Leica [2]
Camera name	RMK Top	RC 30
Image format [cm²]	23 x 23	23 x 23
Optics	Pleogon A3	UAG-S
Focal length [cm]	15	15
Field of view [gon]	82	82
Apertures	1:4 – 1:22	1:4 – 1:22
Exposure time [s]	1/50 – 1/1000	1/100 – 1/1000
Film length [m]	150	120
min. Image cycle [s]	1.5	2
Overall weight [kg] [3]	~ 134	~ 130

[1] Intergraph/ZI-Imaging formerly Carl Zeiss
[2] Leica Geosystems formerly LH-Systems, Wild
[3] incl. mount, film magazine, control unit

Airborne camera RC30 (more)

Three objectives (8.8, 15, 30 cm).

Exposure intervals 1/100 s - 1/1000 s.

Max aperture f/4

Forward Motion Compensation

Film length 120m

Automatic flight planning, navigation and positioning systems with precise positioning of projection centers.

ASCOT (Aerial Survey Control Tool)
Allows the automatic flight path following, giving to the pilot a real time control of aircraft and camera positions respect to the planned course.

Directly gives center of projection coordinates to be used in A.T computations.

Taylored selection of imaged information (e.g. auxiliary and external data)

RMK TOP (more)

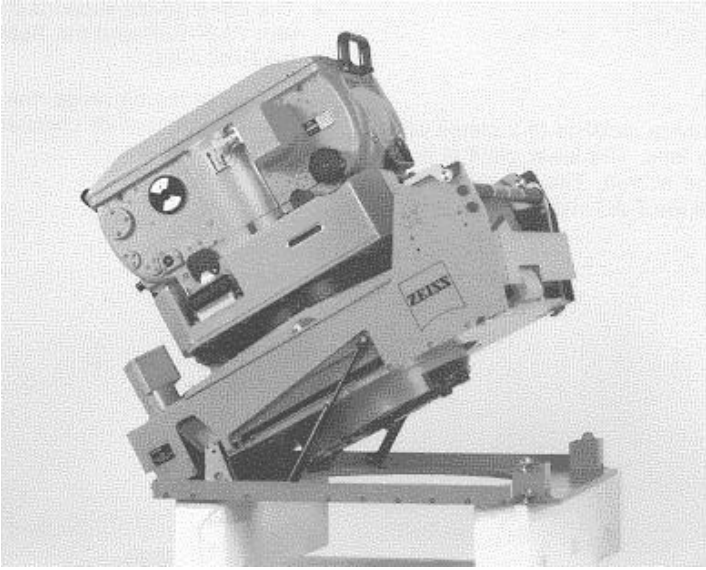

Focal lenghts 15 cm e 30 cm.
Exposure intervals 1/50 s - 1/500 s
Forward Motion Compensation

Rubber vibration damper (better image quality)

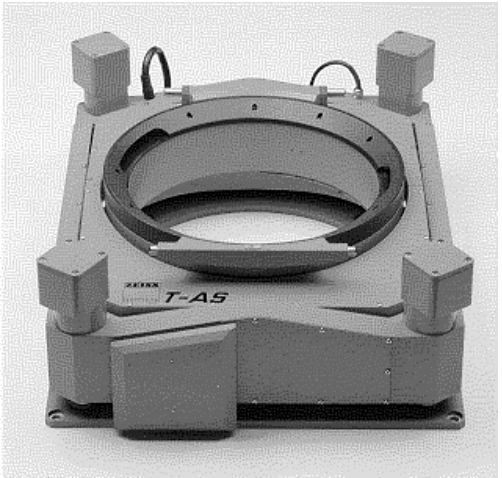

Possibility of flight control by GPS/INS system and of precise projection centers positioning for successive A.T.

Can be totally and automatically controlled by the pilot

Taylored selection of imaged information (e.g. auxiliary and external data).

Automatic control of drift and overlap

Will digital aerial cameras substitute analogue cameras ?

In the future, but analogue cameras are still widely used :

World use of analogue and digital airborne cameras

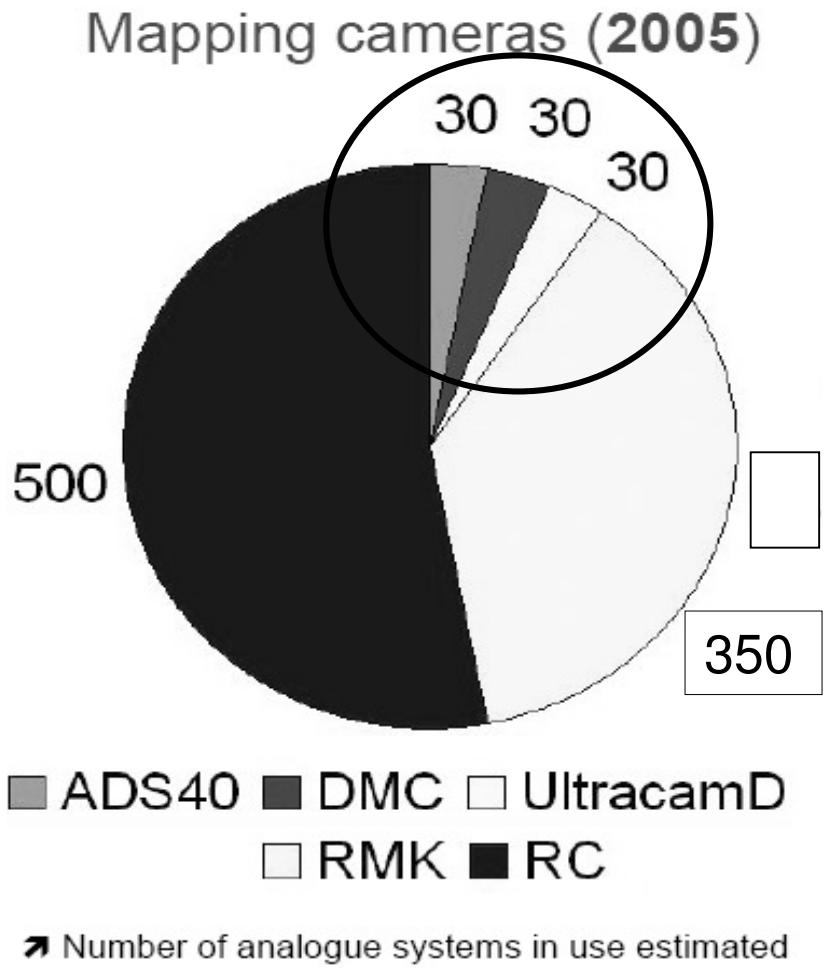

INNER ORIENTATION DETERMINATION

A photogrammetric camera objective is an optical system realized combining different kind of lenses. The deviation of its behaviour from an idealized model give rise to various source of image distorsions

For an ideal optical system there are two principal planes that have peculiar properties: **principal planes H and H'** (in object space and image space)

The intersections of **H and H'** with the Optical Axis (OA) identify the **nodal points N and N'**

- the 'central rays' passing through the nodal points, form the **same angle τ** with the optical axis in the object space and in the image space

N is the projection center in the object-space and N′ is the projection center in the image-space

Idealized image formation geometry

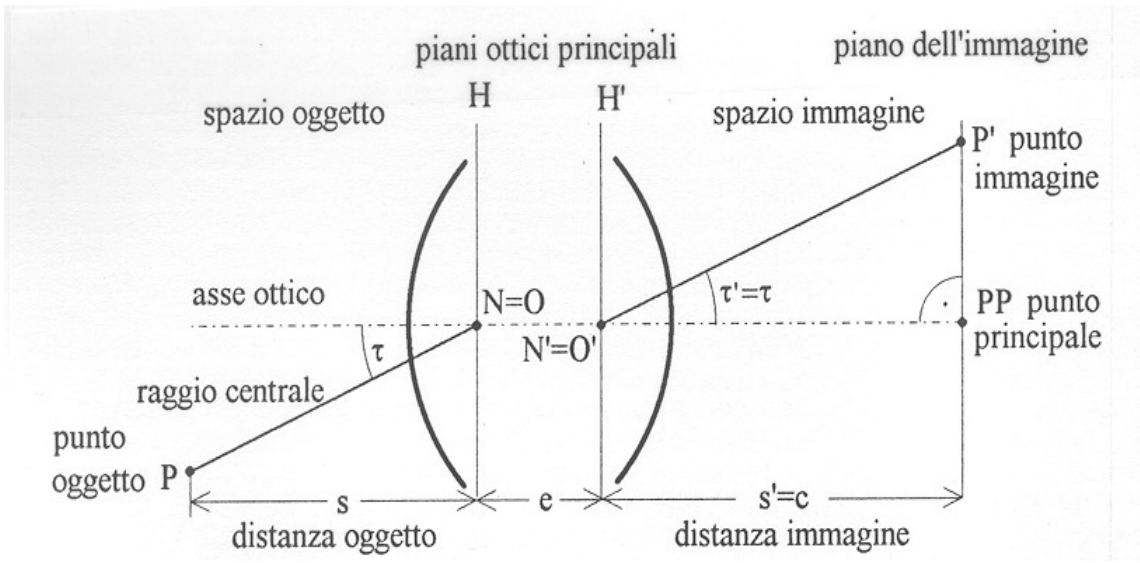

INNER ORIENTATION

The optics of a metric camera is a thick asymmetric objective

Individual lenses are made of different types of glass to ensure the greatest possible corrections of imaging errors

The **aperture stop** (**diaframma)**, is not in the center of the objective, and limits the effective bundle of rays forming the image points ➔ **entrance pupil EP** (and exit pupil in image space)

Problem : where is the projection center??

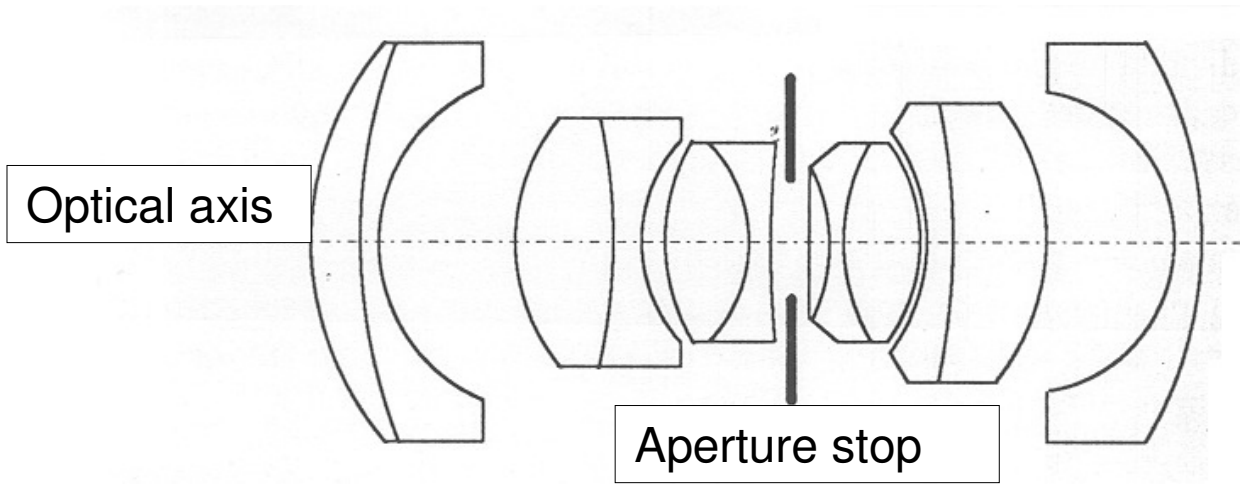

Centers of EP and EP' define the REAL projection centers, in object and image spaces

INNER ORIENTATION

Real photogrammetric objective is **very different** from theoretical optical model

REAL image formation geometry

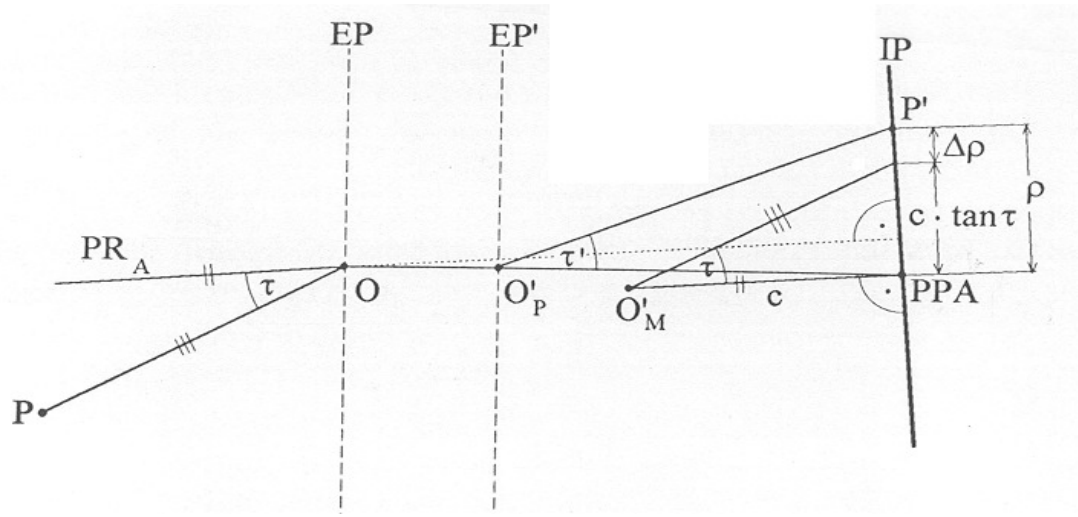

the **optical axis OA** should contain the centres of all lenses, but small errors sum up

➔ the reference optical axis **is not OA**, but a **calibrated principal ray PR_A**, (A= autocollimation) perpendicular to the image plane and passing through the entrance proj.center O. Its extension through O' intersects the image in the '**principal point of autocollimation' PPA**

- τ' is different from τ (because EP and EP′ do not coincide with H and H′)

- the mechanically realized principal distance s' differs slightly from the optical principal distance s'
- Image Plane is not rigorously perpendicular to the optical axis OA, nor to PR_A

INNER ORIENTATION

MAIN EFFECT : angle τ' is different from τ

Correction: define a mathematical projection center O'_M wich lies at a perpendicular distance c from PPA that reproduces the angles τ as closely as possible

In any case there exists a difference in position from real image point P' and the theoretical position.

The distance is a residual error called optical **distorsion** .

We distinguish two components, one radial $\Delta\rho$ and the other $\Delta\tau$ tangential, perpendicular to the first one **(*radial, & tangential distortion*).**

The tangential distortion (often called 'decentering distorsion') is due to non perfect centering of all the lenses forming the camera lens.

Usually the radial distortion $\Delta\rho$ is much bigger than the tangential one $\Delta\tau$, that is normally around 5%.

INNER ORIENTATION

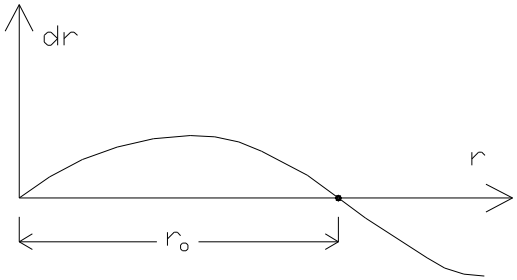

Distorsion curve

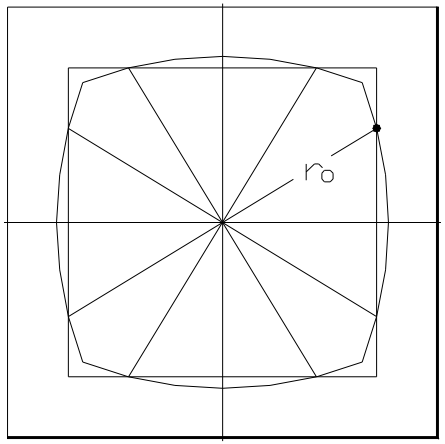

Barrel distorsion

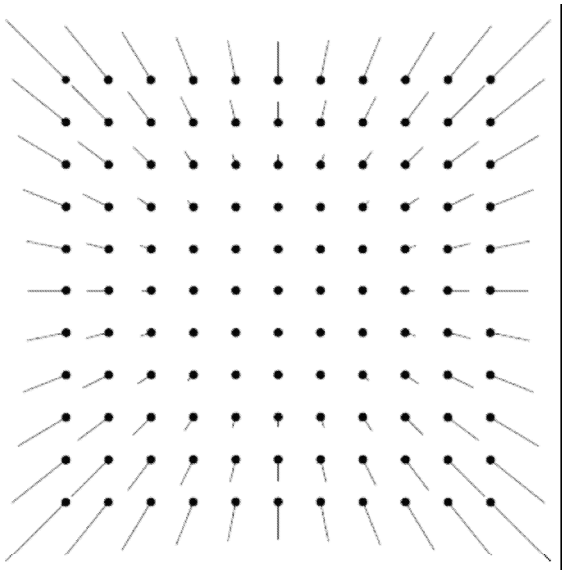

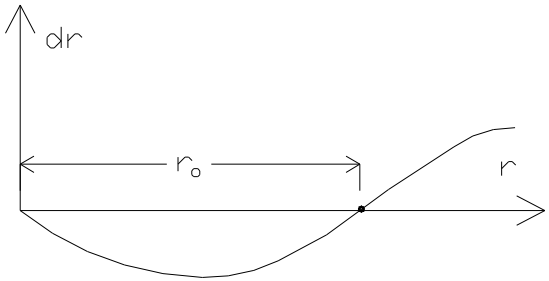

Distorsion curve

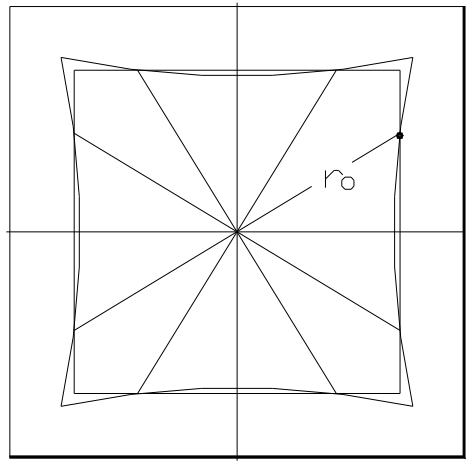

Cushion distorsion

DECENTERING DISTORSION

In high precision surveys the decentering or tangential distorsion must be taken into account, that derives from a non perfect centering of the lenses composing the optical system.

The effect is that radial straight lines become curves

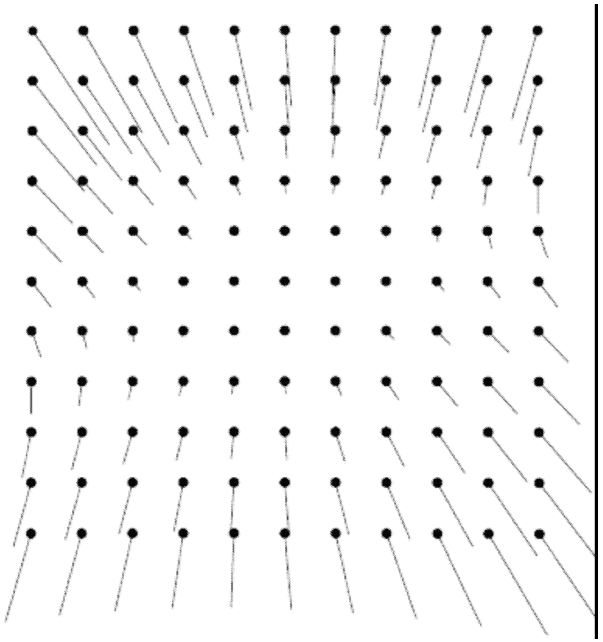

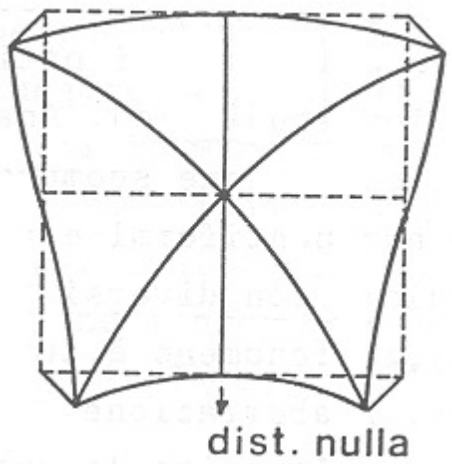

INNER ORIENTATION

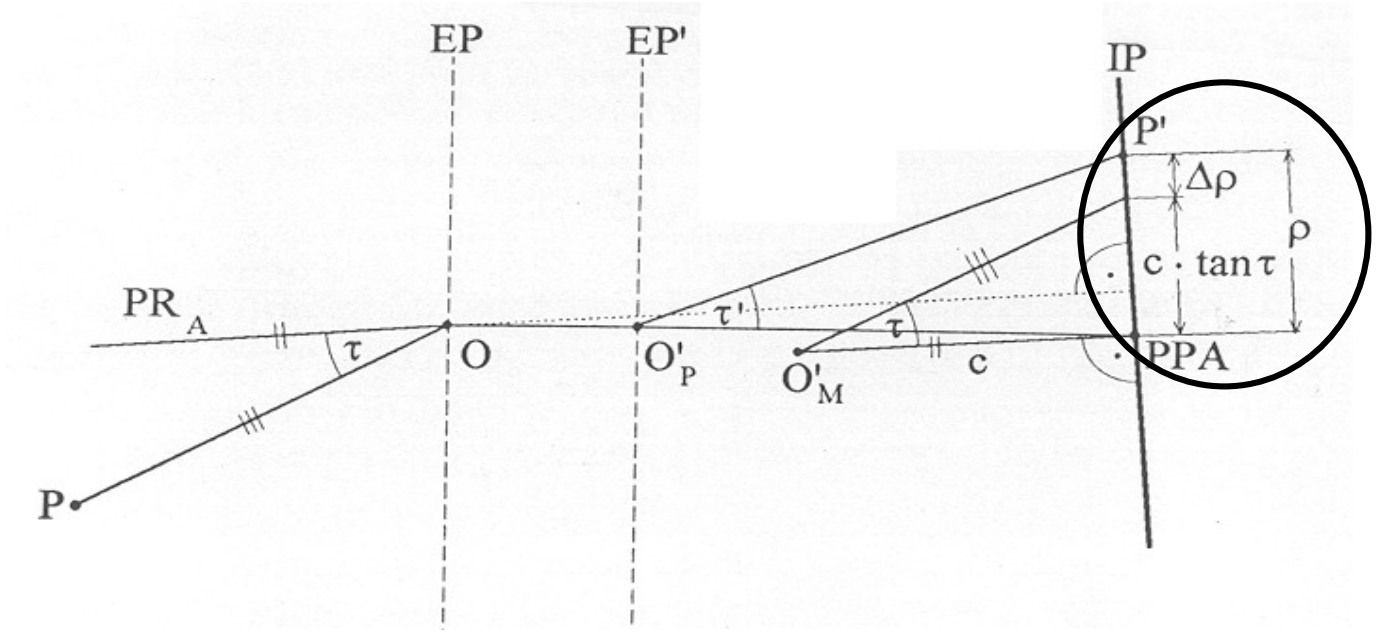

The following relation holds between radial distance ρ of a point P' respect to PPA and radial distorsion Δρ (in P'):
inner orientation equation

$$\rho = c\, tg\, \tau + \Delta\rho$$

$$ctg\, \tau = \rho_{teor}$$

Camera calibration

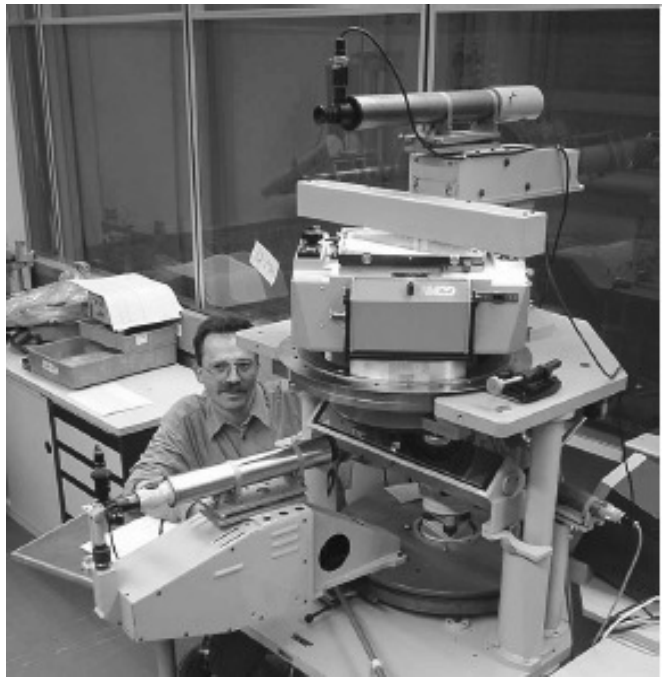

Goniometer
Zeiss, Oberkochen

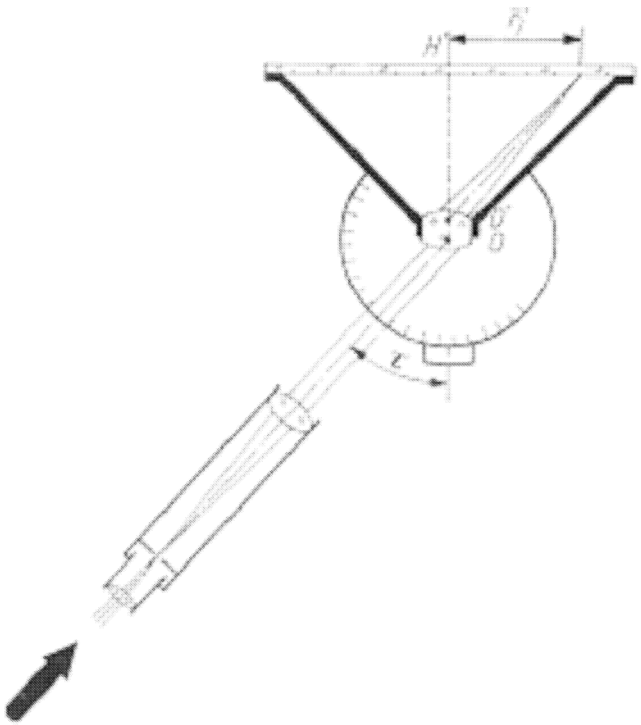

Radial distorsion curves are measured during calibration procedures in a laboratory using a 'photo-goniometre'

For fixed τ, the corresponding $\rho' = \rho_{obs} = \rho_{teor} + \Delta\rho$ are measured, using a calibrated grid (0.1 μm)

A complete calibration procedure consists of determining the position of PPA and the radial distorsion along the four semi-diagonals of the photogram. (To take care of asymmetry)

$$ctg\,\tau = \rho_{teor}$$

The differences $\rho_{oss} - ctg\,\tau = \Delta\rho$ are the optical radial distorsions

Usually these four curves are non identical.

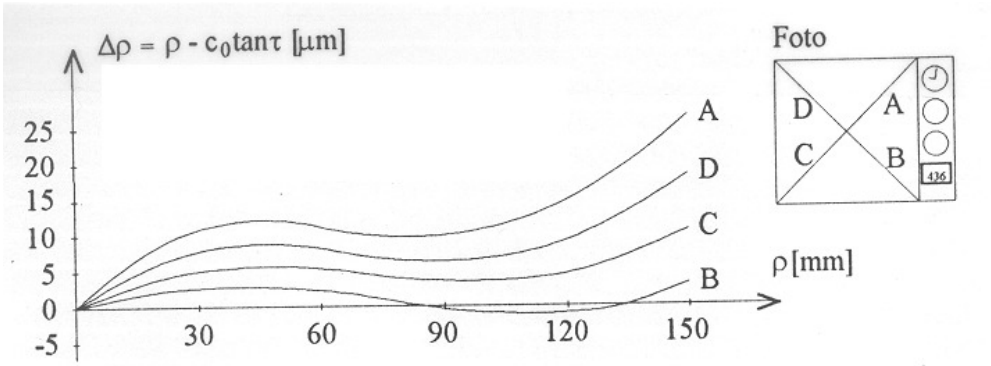

The asymmetry is greatly reduced by choosing another axis as reference: the principal axis of symmetry **PR$_S$**.

PR$_S$ pass through O and intersects the image plane IP in the Point of Best Symmetry ➔ **PBS**

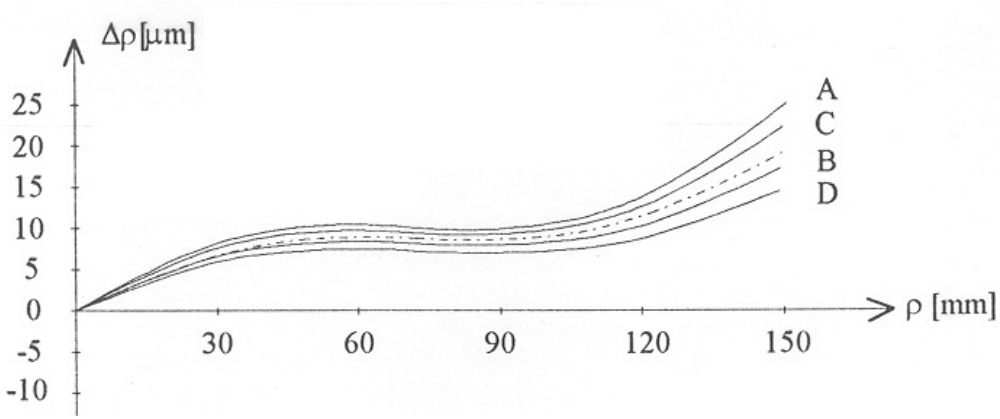

The reference optical axis becomes PR_S in place of PR_A and:

- (ξ, η) refers to PBS
- the new projection center is O'_M, and is at distance c from PBS
- radial distorsion curves are referred to PBS

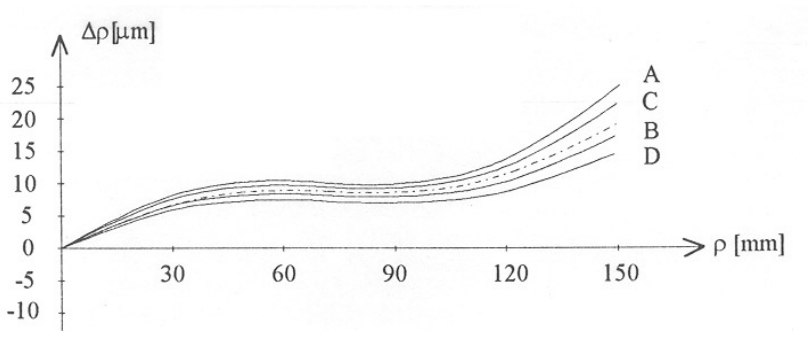

In order to model and reduce as better as possible the radial distorsions, during the calibration procedure a new (calibrated!) principal distance c'=c+ **Δc** is computed, so as the distorsion curves are as near as possible to the ρ axis (nearly zero values)

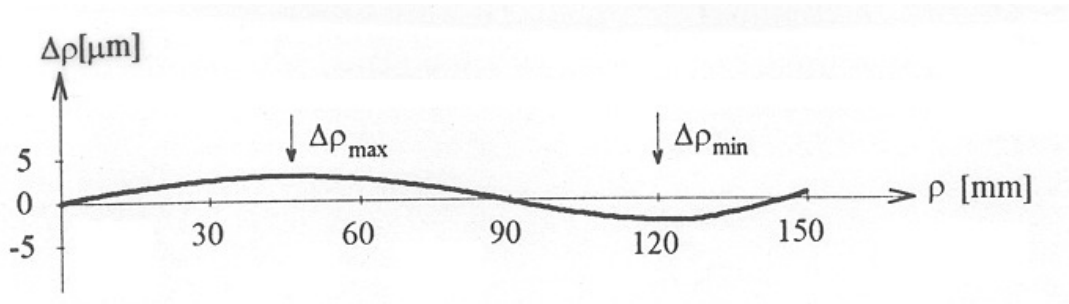

In fact, the effect of varying the principal distance is to rotate the curves around the origin.

- Older photogrammetric objectives have mean radial distorsion up to $|\Delta\rho| \leq 30\ \mu m$
- Modern objectives are nearly distorsion-free $|\Delta\rho| \leq 2\ \mu m$

So small distorsions are corrected only in high precision photogrammetry, taking into account both radial and tangential distorsion, together with other photogram deformations.

- How radial distorsion curve is used:

given (measured) ξ and η, it is possible to compute ρ: $\rho = \sqrt{(\xi - \xi_0)^2 + (\eta - \eta_0)^2}$

then Δρ can be deduced from distorsion curve

$$\rho_{teor} = \rho_{corr} = \rho_{oss} - \Delta\rho$$

$$\Delta\rho = \rho_{oss} - c \tan\tau = \rho_{oss} - \rho_{teor}$$

Δρ is decomposed into the components Δξ, Δη: $\Delta\xi = \frac{(\xi - \xi_0)}{\rho}\Delta\rho \quad \Delta\eta = \frac{(\eta - \eta_0)}{\rho}\Delta\rho$

These are corrections to be added to image measured coordinates ξ and η.

$$\xi_{corr} = \xi_{oss} - \Delta\xi$$

$$\eta_{corr} = \eta_{oss} - \Delta\eta$$

- Modello di *Fraser,* 1999, 10 parametri:
- c, X_0,Y_0: parametri di O.I. standard
- K_1, K_2, K_3: distorsione radiale
- P_1, P_2: distorsione tangenziale
- b_1,b_2: distorsione affine

$$\xi = D\xi - c\,NX / D \qquad \eta = D\,\eta - c\,NY / D$$

- $Dx = X_0 + x\,(K_1\,r^2 + K_2\,r^4 + K_3\,r^6\,) +$
- $+ P_1(r^2 + 2x^2) + 2\,P_2\,x\,y + b_1\,x + b_2\,y$

- $D\,\eta = Y_0 + \eta\,(K_1\,r^2 + K_2\,r4 + K_3\,r^6\,) +$
- $+ P_2(r^2 + 2y^2) + 2\,P_1\,\xi\,\eta$

CALIBRATION CERTIFICATE

For the physical definition of the image coordinate system fiducial marks are used, imaged in every photograph, that define the fiducial centre FC.
But the image coordinates have to be referred to PPA or PBS.

Photogrammetric cameras commonly have PPA, PBS and FC at distances smaller than 20 μm.

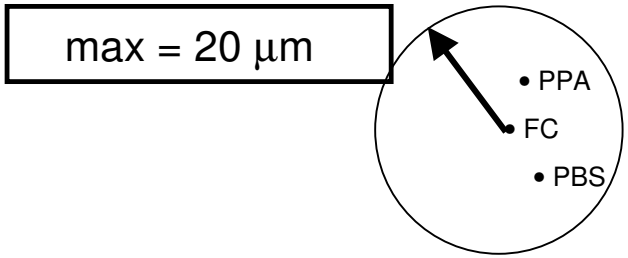

The calibration certificate of a photogrammetric camera contains :

- image coordinates of fiducial marks;
- image coordinates of FC, PPA and/or PBS;
- principal distance c;
- the mean radial distorsion curve;
- date of calibration;
- information on image sharpness.

➔ In Italy the calibration certificate has to be renewed every 2-3 years

RC30 15/4 UAG-S No. 13330 14.12.2001

Principal point of autocollimation (PPA) and principal point of symmetry (PPS)
referred to central cross (FC), see diagram

	x (mm)	y (mm)
PPA	-0.005	-0.001
PPS	-0.004	-0.009

Fiducial marks, referred to central cross (FC)

	x (mm)	y (mm)		x (mm)	y (mm)
1	106.001	-106.000	5	-0.002	-111.996
2	-106.001	-105.999	6	-112.001	0.000
3	-106.001	106.000	7	-0.001	112.000
4	106.003	106.001	8	112.003	0.002

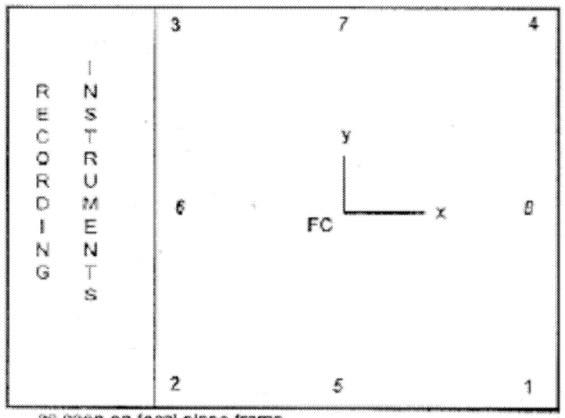

as seen on focal plane frame

RC30 15/4 UAG-S No. 13330 14.12.2001

Aperture: 4.0
Filter on goniometer: VIS (400-700 NM)
Filter on camera: --
C.F.L. : 153.314 mm

Mean radial distortion

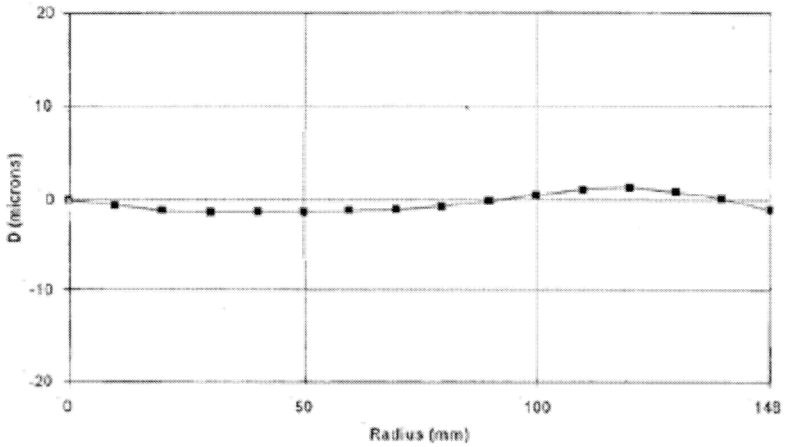

Radial distortion for semi-diagonals referred to PPS

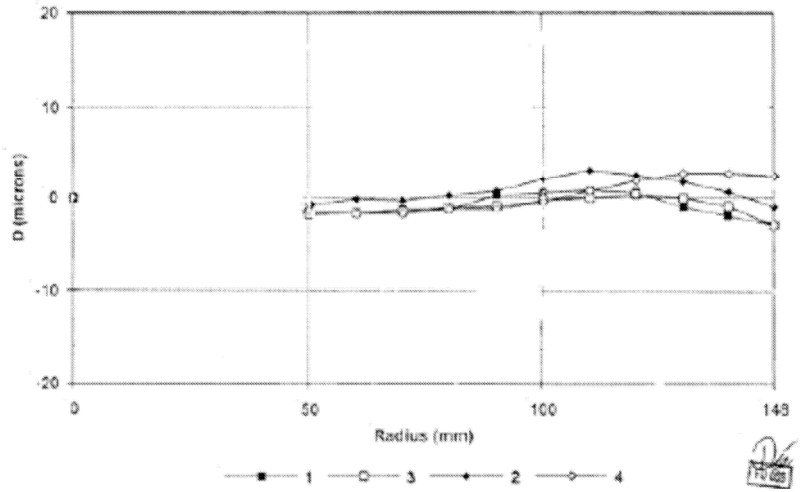

Camera calibration

Radial distorsion can be modelled through a polynomial curve

Photogrammetric sw accept curves given in a discretized tables $\Delta\rho(\rho)$, or in terms of polynomial coefficients : K_0, K_1…..(also for semi-metric cameras)

$$\Delta\rho = K_0\rho_{oss} + K_1\rho_{oss}^3 + K_2\rho_{oss}^5 + ...$$

$$\Delta\rho = A_1\rho_{oss}\left(\rho_{oss}^2 - R_0^2\right) + A_2\rho_{oss}\left(\rho_{oss}^4 - R_0^4\right) + ...$$

The film magazine should be included in the calibration too

For high precision works it is advisable to take calibratiion photographs under the same flying condition, before and/or after normal photographic survey, over a test field with signalized points.

Camera calibration

Cameras for close range are also often calibrated on a spatial test field, computing all parameters of inner and outer orientation together.

(self-calibration)

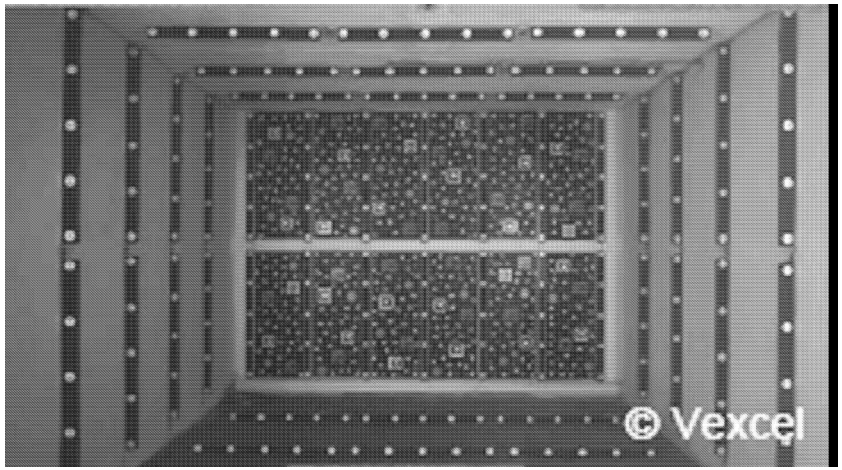

Test field

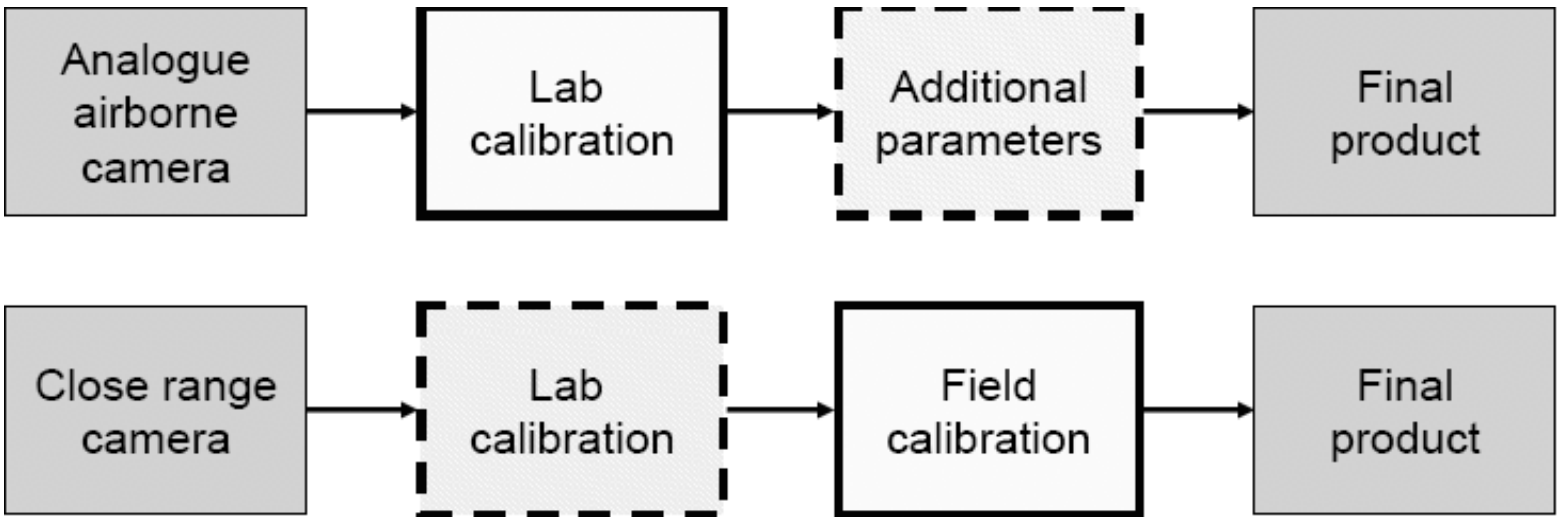

Goniometer
Zeiss, Oberkochen

Multi-collimator
USGS OSL, Reston