THREE-DIMENSIONAL CONTROL OF SHIP CONSTRUCTIONS

Article *in* VTT Publications · January 1978

5 authors, including:

Henrik Haggrén
Aalto University

TECHNICAL RESEARCH CENTRE OF FINLAND
BUILDING TECHNOLOGY AND COMMUNITY DEVELOPMENT
PUBLICATION 13

UDC 629.12:528.74

THREE-DIMENSIONAL CONTROL OF SHIP CONSTRUCTIONS

HENRIK HAGGRÉN
Laboratory of Land Use
MATTI MARTIKAINEN
Helsinki University of Technology
HANNU SALMENPERÄ
Tampere University of Technology
HEIKKI VEHKAPERÄ
Laboratory of Land Use
SEPPO VÄÄTÄINEN
Laboratory of Land Use

ESPOO 1978

ISBN 951-38-0604-9
ISSN 0355-337X

VTT OFFSETPAINO 1978
618/3

PREFACE

This research was initiated after some experiment works which had been carried out at the dock of Oy Navire Ab Navireyard during the year 1975. These works had consisted of a dimensional definition of some irregular shipblocks which could not be defined by the use of conventional measuring methods. While analyzing the results, it became clear that the numerical results alone did not provide sufficient information for proper decision making.

Because the development of a new method was considered to be of wider importance to solving controlling problems in industry, a research plan was delivered to the Ministry of Trade and Industry. The aim of the project was to design a measuring and calculation method with proper graphical output for the controlling of shipblocks. The Ministry of Trade and Industry appropriated the required funds for the project, which was carried out in 1976...77.

The working group of the project consisted of:

Dr. Matti Martikainen, head of the project, professor at the Helsinki University of Technology; Tech.lic. Hannu Salmenperä, assistant professor at the Tampere University of Technology; Dipl.eng. Henrik Haggrén, researcher at the Technical Research Centre of Finland; Dipl.eng. Seppo Väätäinen, researcher at the Technical Research Centre of Finland; Tech.stud. Heikki Vehkaperä, apprentice researcher at the Technical Research Centre of Finland.

The research project was carried out at the Technical Research Centre of Finland in the Laboratory of Land Use. By providing the working group with the main part of the instruments used, the Laboratory of Geodesy and the Laboratory of Photogrammetry of the Helsinki University of Technology and the Laboratory of Geodesy and Photogrammetry of the Tampere University of Technology made it possible to carry out the project. Oy Navire Ab Navireyard participated in the experiment work. Oy Wärtsilä Ab, Turku, supplied the working group with some valuable information. The working group wishes to thank everyone mentioned above together with the Ministry of Trade and Industry for their support, without which this project would hardly have been successful.

Otaniemi, January 21, 1978

Professor Matti Martikainen

CONTENTS

ABSTRACT

It has recently been acknowledged that the photogrammetric measuring methods which have been developed mainly for mapping purposes are a most advantageous, sometimes even the only possible solution to various problems in the field of engineering survey.

This publication contains a description of a research project dealing with a photogrammetric measuring method suitable for the measuring and controlling of constructions. A remarkable part of the research project consisted of an experiment work in which the shape, size and compatibility of two shipblocks was measured using three different metric cameras. Computations were performed using a general three-dimensional adjustment software, which was one of the results of the project. The results obtained with the three cameras and the accuracy of the results were compared with each other and with the results obtained by geodetic measuring methods. The standard error of one coordinate determined by the photogrammetric measuring method was ±2 mm. Serious attention was paid to the presentation of the results on a digital plotter. Included are some examples of the graphical presentation of the results obtained in the experiment work. The drawings are coloured for better readability.

1. INTRODUCTION

The photogrammetric methods in measuring and interpreting shapes of things have been developed mainly for mapping purposes. They have recently been acknowledged as a most advantageous, sometimes even as the only possible solution to various problems in the field of engineering survey [1...2].

The photogrammetric methods are especially well suited for solving problems in which one has a great number of points to be measured and in which the object to be measured is three-dimensional (shape, size, volume) or in which the object is mobile (deformations, movements) or in which the object is intangible. The measurement problems in industry are on a more general level than in mapping, so much so that the readiness to perform this kind of measuring tasks and especially to produce results in useful form has been quite poor. The coordinate lists which are the only output of an ordinary process are impractical and necessarily need graphical presentation in order to be effectively utilized.

Nowadays ships are often fabricated of large, readymade elements which may be transported over long distances for assembly. The shape and size of the elements are controlled by conventional mechanical measuring methods. Shipbuilders have found these methods rather impractical, slow and inaccurate in many tasks. On many occasions, those responsible for the control measurements have manifested their interest in modern methods which might have better correspondence with the requirements of today's shipbuilding.

The aim of the research work was to develop a flexible measuring method which would be suitable for the measuring of the shape, size and deformation of different kinds of shipblocks and which would provide a proper graphical presentation of the results.

In the first phase of the project, software was developed for the simultaneous computation of geodetical and photogrammetric observations. Furthermore, programs were developed to produce graphical output on the basis of adjusted coordinates.

2. THE MEASURING METHOD

The purpose of the measuring method is to determine the shape and size of a construction. The shape of a construction is measured as three-dimensional coordinates of the object points from a spacemodel which is analytically formed by the use of photos taken of the object. The scale of the model is determined by the distances between the control points targeted on the object. The results of measuring are stored in a coordinate file used as a base for numerical, statistical and graphical presentation. The mathematical fundamentals and the accuracy of the method have been published, among others, by HOTTIER [3] and WONG [4].

A description of this measuring method is filed in the register of test methods at Technical Research Centre of Finland [5]. The software needed in the method is documented in the program abstract register of technomathematical programs at Technical Research Centre of Finland [6].

2.1 Description of the method

At first, the construction to be measured and the object points on it must be fixed. If the results are to be presented in the coordinate system of the object, this must be fixed. All points to be measured must be targeted. The control points must be so selected that the distances between them are approximately equal to the dimensions of the construction. The control distances are measured with a steel measuring tape.

The camera stations must be so selected that every targeted point can be seen on at least one pair of photos, the base being about the same as the distance from the camera to the object. The photography is done with a metric camera using glass plates. Every point to be measured is marked and numbered on the positive copies of the photos. The glass-negative photos are measured in a comparator. Two pointings are made on every measured point.

On the basis of the control distances and the calculated image coordinates of the points, a numerical spacemodel is computed using a general three-dimensional adjustment program.

The inaccuracy of the result, due to the measuring method and expressed as a standard error of one coordinate, is at most ±2 mm. The inaccuracy is also affected by the errors arising from the identification and targeting of the object points.

2.2 The software for computation of observations

In the beginning of the project, a three-dimensional adjustment software was developed. The following types of observations can be adjusted simultaneously:
- horizontal angles,
- vertical angles,
- height-differences,
- slope distances,
- image coordinates and
- three-dimensional model coordinates.

This kind of software is almost absolutely necessary in many measuring tasks of engineering survey. For instance the determination of the control point coordinates for photogrammetric calculations is troublesome in many cases. However, distance measurements by steel tape may completely substitute the coordinates of the control points.

The software was programmed on a Hewlett-Packard HP2100 minicomputer. The conjugate-gradient method is used for the solution of the equation system.

The capacity of the software is as follows:
- no. of observations 32000,
- no. of photos, models and sets of angle observations in total 200,
- no. of object points 750 and
- no. of unknown parameters in adjustment 3500.

3. PRESENTATION OF THE RESULTS

Reliability and readability are the most important criteria of the presentation of the results. The coordinates of the object points, which are the result of the adjustment, are presented in numerical form. The result is reliable, but it is difficult to say anything about the object and about those properties of the object that are of particular interest.

On the basis of the coordinate file it is possible to examine the properties of the object in various ways. The properties to be studied may be distances, planes, the perpendicularity of a plane to a given direction, the parallellity of planes, the arched form of surfaces, or deviations from the construction drawings.

The properties to be examined are generally case-dependent and must be defined before performing measurements. The results may be presented as plots with important features magnified.

The compatibility of the two halves of a ship and the deviations from the theoretical drawings are presented in Figure 1. The compatibility of the individual points is presented as deviations in the direction perpendicular to the board. The deviations are ten times magnified as compared with the scale of the body. The other example is a graphical output of the experiment work. The compatibility of the two adjoining blocks is presented as distances between corresponding position points (Fig. 8...12).

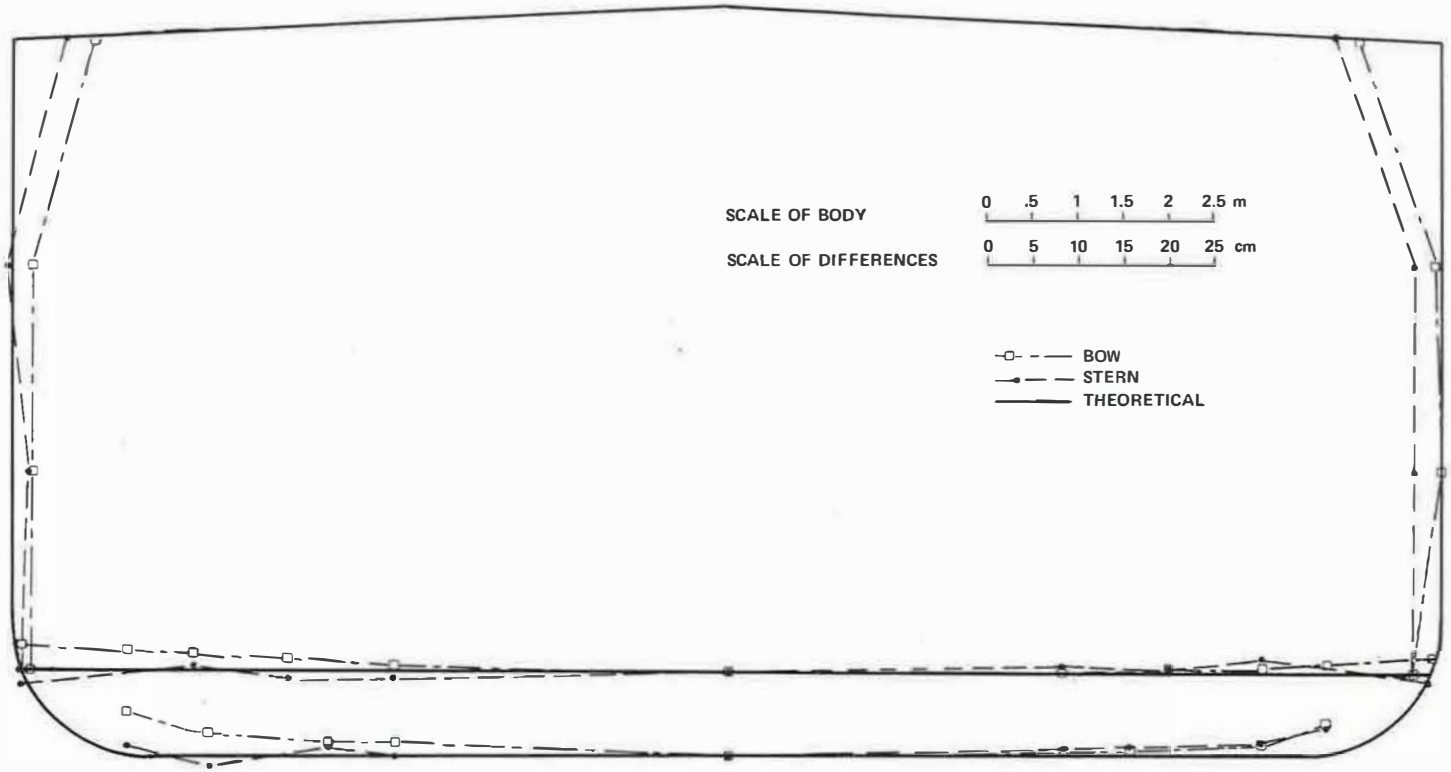

Fig. 1. Compatibility of the two halves of a ship and deviations from the construction drawings.

4. EXPERIMENT WORK

4.1 General

The experiment work was carried out in September 1977 at the dock of Oy Navire Ab Navireyard in Parainen. The object to be defined consisted of two shipblocks both weighing about 40 tons (Fig. 2). The shape, size and compatibility of the blocks was to be controlled using the geodetic and protogrammetric equipment available.

The geodetic measurements were performed with instruments and methods that would produce results accurate enough for comparison with the photogrammetric results. The photogrammetric measurements were performed with three different cameras. Both the geodetical and photogrammetric observations were processed with the equipment presented in Fig. 3. Several combinations of observations were computed. The results obtained with each of the cameras were compared with each other and with the results geodetically obtained.

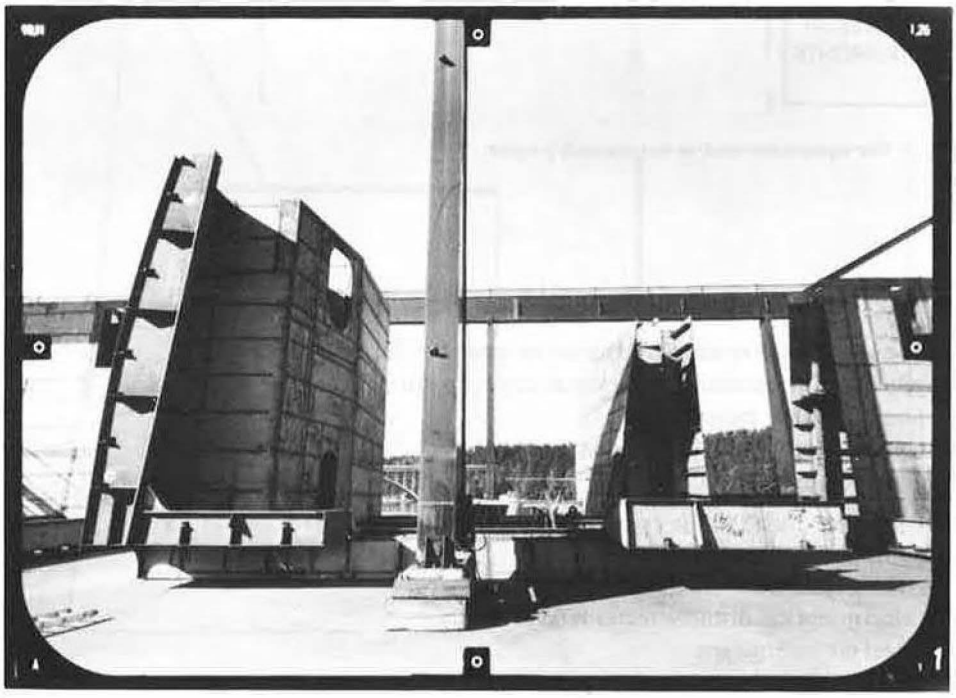

Fig. 2. The shipblocks in the experiment work. The photo taken with the metric camera Carl Zeiss Jena UMK 10/1318.

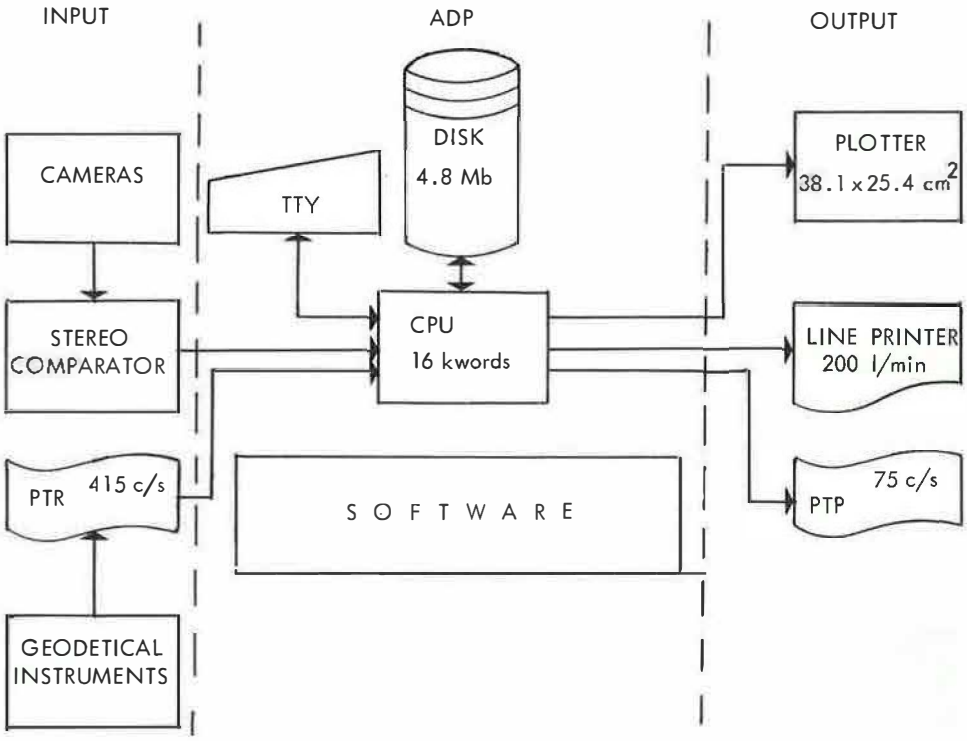

Fig. 3. The equipment used in the research project.

4.2 Design of the experiment work

The experiment work was designed to consist of four main phases:

- geodetical measurements of ground control point net and the control points,
- photographical measurements,
- computations of the observations, and
- design of graphical output.

The equipment used in the experiment work consisted of

- geodetical instruments
  . one-second theodolite Wild T2
  . electro-optical distance meter Wild DI3S
  . steel measuring tape
  . meteorological instruments
- photogrammetric instruments
  . metric camera Carl Zeiss Oberkochen TMK 6
  . metric camera Carl Zeiss Jena UMK 10/1318
  . fixed base metric stereocamera Carl Zeiss Oberkochen SMK 120

- equipment for measuring the photos
  . stereocomparator Carl Zeiss Oberkochen PSK 1
- data processing equipment
  . minicomputer Hewlett-Packard HP2100 with appropriate peripherals
  . digital plotter Hewlett-Packard HP7210A.

The hierarchy of the points to be determined in the experiment work was designed to consist of three levels:

a) the ground control points around block 88BB to be determined by geodetical means (Fig. 4)
b) the control points on the blocks to be geodetically determined (Fig. 5)
c) the checked position points to be determined by photogrammetric means and partly by geodetical means in order to make it possible to compare with each other the different methods (Fig. 5).

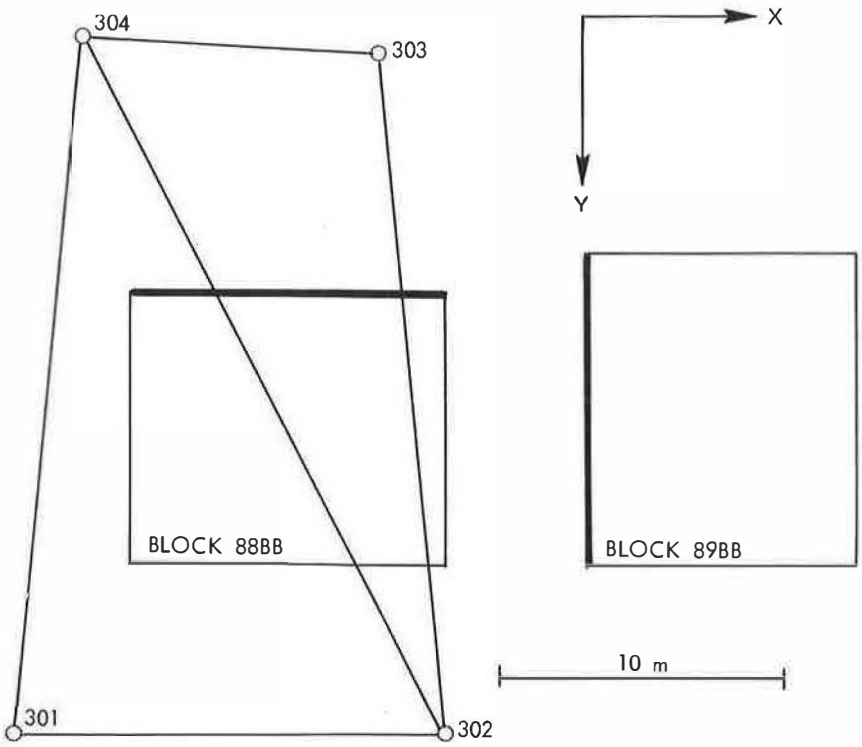

Fig. 4. Mutual position of the blocks and the ground control point net as seen from the direction of positive Z-axis. The cross sections to be welded are thickened.

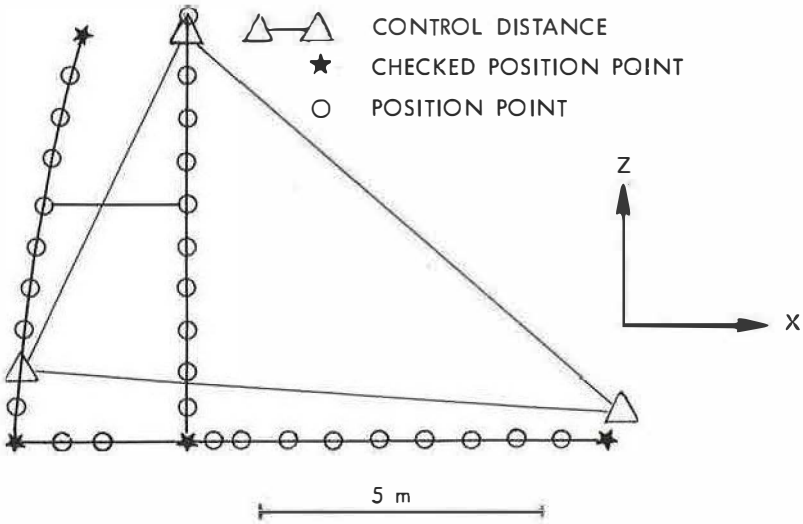

Fig. 5. The control points, checked position points and position points targeted on a block as seen from the direction of positive Y-axis.

4.3 Realization of the experiment work

4.3.1 Preparations for the measurements on the dock

The blocks 88BB and 89BB to be measured, sizing about 12 m x 8 m x 10 m each, lay side by side on the dockyard with the cross sections to be welded together perpendicular to each other (Fig. 4). A position more profitable for the measurements had been if the blocks had been placed parallelly, side by side.

On the basis of the mutual position of the blocks, the number and location of the ground control points was determined (Fig. 4). The four points chosen were marked on the ground and a tripod with a centering plate was mounted on each of them. Three control points were determined for each cross section to be measured; they were equipped with star-shaped targets(Fig. 6). The checked position points were targeted using magnetic plate targets (Fig. 6) which were centered according to the centerlines of the plates to be welded. Every targeted point was numbered and sketched on a scheme of the cross sections.

4.3.2 Geodetical measurements

The ground control point net was measured in three-dimensional space. Both horizontal and vertical angles were recorded as well as the measured slope distances. The angle observations were made by a one-second theodolite Wild T2 and the distances were measured by an electro-optical distance meter Wild DI3S. Two series of angle observations were made at each of the four station points and the distances were measured from both ends of each line. The other diagonal of the square-shaped ground control point net could

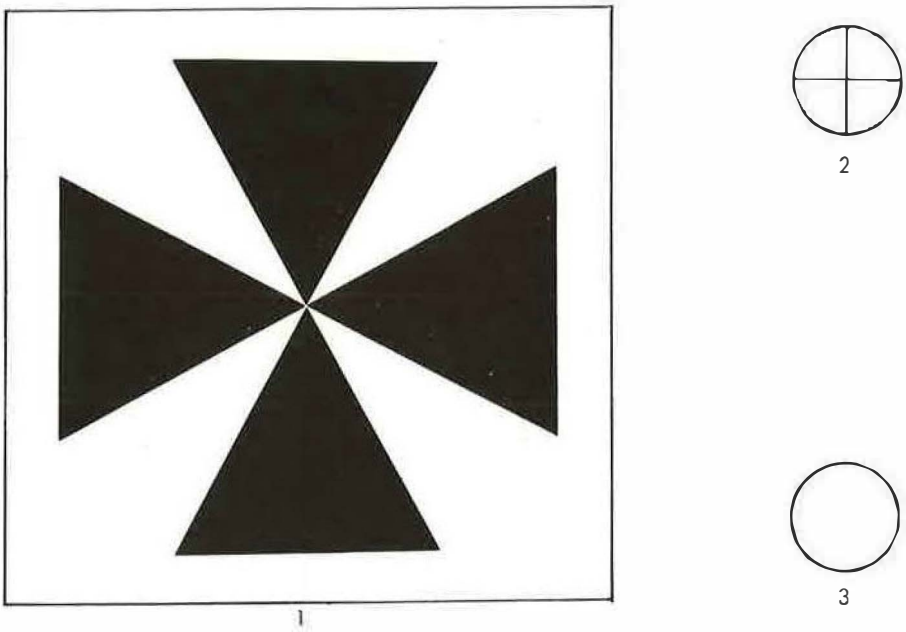

1 Control distance signal

2 Checked position point signal

3 Position point signal

50 mm

Fig. 6. The types of targets used in the experiment work.

not be observed. The control points as well as the checked position points were observed simultaneously with the ground control points. A palmate set of directions thus consisted of approximately ten bearings.

4.3.3 Photogrammetric measurements

Three different metric cameras were used for the photography. Both cross sections of block 88BB were photographed, hence only the cross section to be welded was photographed on block 89BB. Three photos were taken of each of the cross sections with the metric cameras TMK 6 and UMK 10/1318 (Fig. 7). The distance from the cameras to the object was about ten meters. The tilts from the horizontal plane varied from $+10^\circ$ to $+20^\circ$ with the TMK. The tilt of the UMK was levelled to be $+15^\circ$ from the horizontal plane. One stereopair of each cross section was photographed with the SMK from a distance of about twelve meters (Fig. 7). The SMK was levelled to the horizontal plane. The directions of the camera-axes of each of the cameras were so selected that all targeted points could be seen on every exposure.

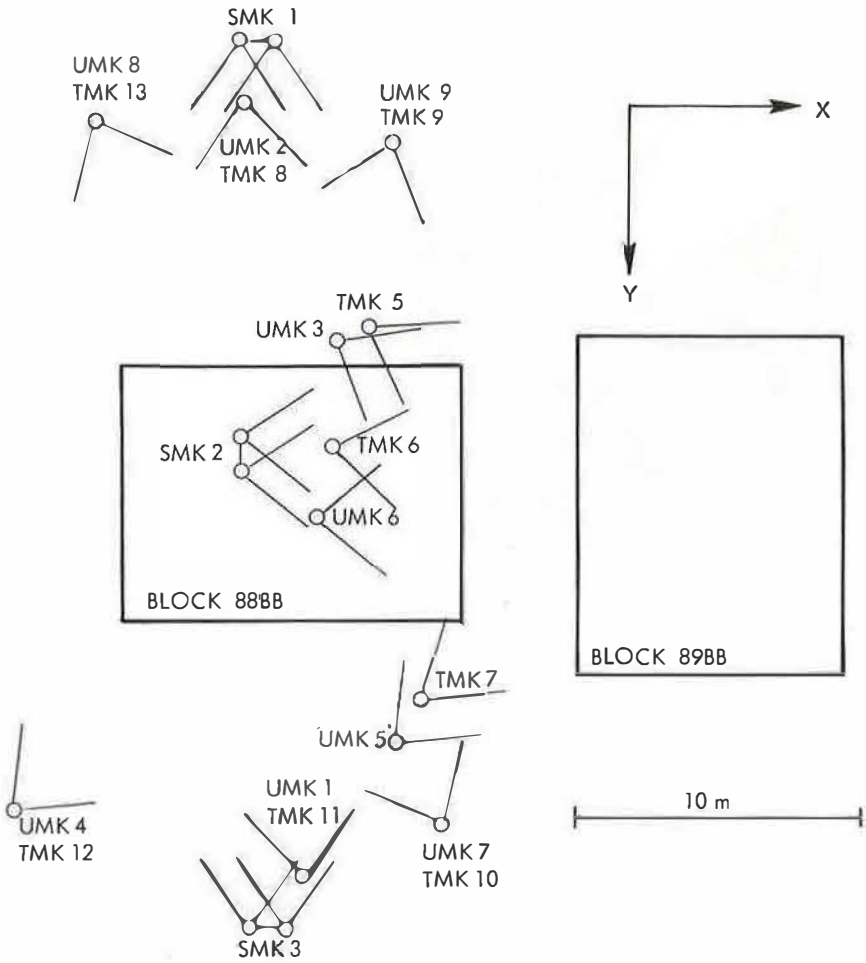

Fig. 7. The camera stations and the directions of the camera-axes as seen from the direction of positive Z-axis.

4.4 Manipulation of the observations

4.4.1 Geodetical calculations

All geodetical observations were computed by the use of the general three-dimensional adjustment program. The input of the adjustment consisted of both horizontal and vertical angles and slope distances which were refined with the calibrated corrections of the distancer. The result of the adjustment consisted of the three-dimensional coordinates of ground control, control and checked position points. The RMS-errors after the adjustment have been listed in Table 1.

Table 1. RMS-errors of geodetical observations after adjustment.

	Horizontal angles (mgon)	Vertical angles (mgon)	Distances (mm)	Points (mm)
Ground control points	0.45	3.10	2.60	2.08
Control and checked position points	0.46	3.17	–	0.43

4.4.2 Measurement and calculation of the photos

The targeted points were marked on the paper prints of the exposed photos. The glass-negative photos were measured on the PSK-stereocomparator as mono with 16 times magnification on the ocular system. Both the fiducials and the targeted points were observed with two pointings.

The image coordinates of the photos of all cameras were treated similarly with the general three-dimensional adjustment program. In each case the three control distances were the only known quantities. As a result of the adjustment the three-dimensional coordinates of both the checked position points and the position points were obtained. The RMS-errors of the adjustments are listed in Table 2.

Table 2. RMS-errors after adjustments of the image observations.

Camera/Block	SMK 88BB	SMK 89BB	TMK 88BB	TMK 89BB	UMK 88BB	UMK 89BB
Standard error of image observation (μm)	4.07	3.45	5.27	4.71	5.04	5.60

4.4.3 Evaluation of the numerical results

The variances of the adjusted parameters, i.e., the coordinate unknowns and the orientation unknowns were computed for estimation of the accuracy of the geodetically determined values. Furthermore all correlations between the parameters were computed.

The results obtained from the photographical measurements were inspected by comparing the distances computed from the photogrammetrically determined coordinates to those computed from the geodetically determined coordinates. The differences were analyzed using the Student's t-test. The results of the tests are listed in Table 3.

Table 3. Comparison of the distances computed from adjusted coordinates of each camera to one another and to the distances geodetically determined.

Cameras to be compared/block	No. of differences	Mean of differences (mm)	Standard error of mean (mm)	Significance (95 %)	Minimum difference (mm)	Maximum difference (mm)
Geod-SMK/88BB	18	−0.23	±0.71	no	−7.5	+6.2
Geod-TMK/88BB	18	+0.26	±0.20	no	−1.0	+1.8
Geod-UMK/88BB	18	+0.74	±0.18	yes	−0.8	+2.2
UMK-TMK/88BB	630	−0.35	±0.05	yes	−5.0	+3.0
UMK-TMK/89BB	820	+0.39	±0.03	yes	−2.7	+3.5
UMK-SMK/88BB	630	−2.00	±0.20	yes	−20.2	+13.0
UMK-SMK/89BB	703	+2.12	±0.26	yes	−13.8	+29.7
TMK-SMK/88BB	630	−1.64	±0.19	yes	−19.1	+12.7
TMK-SMK/89BB	703	+1.76	±0.25	yes	−15.0	+29.3

4.5 Graphical presentation of the results

In the experiment work of this research project the compatibility of the two blocks was worked out by comparing the distances between corresponding points targeted on the cross sections of the blocks. The visualization was done by using computer programs designed to drive a digital plotter.

The drawings were designed to resemble as well as possible the construction drawings used by the shipbuilders. The readability of the drawings was improved by the use of colours. The drawings were plotted at various scales so that either the whole cross section or a certain part indicated by an index could be presented (Fig. 8...12). It was possible to plot any of the 630 distances which could be combined from the 36 position points common to the cross sections to be welded.

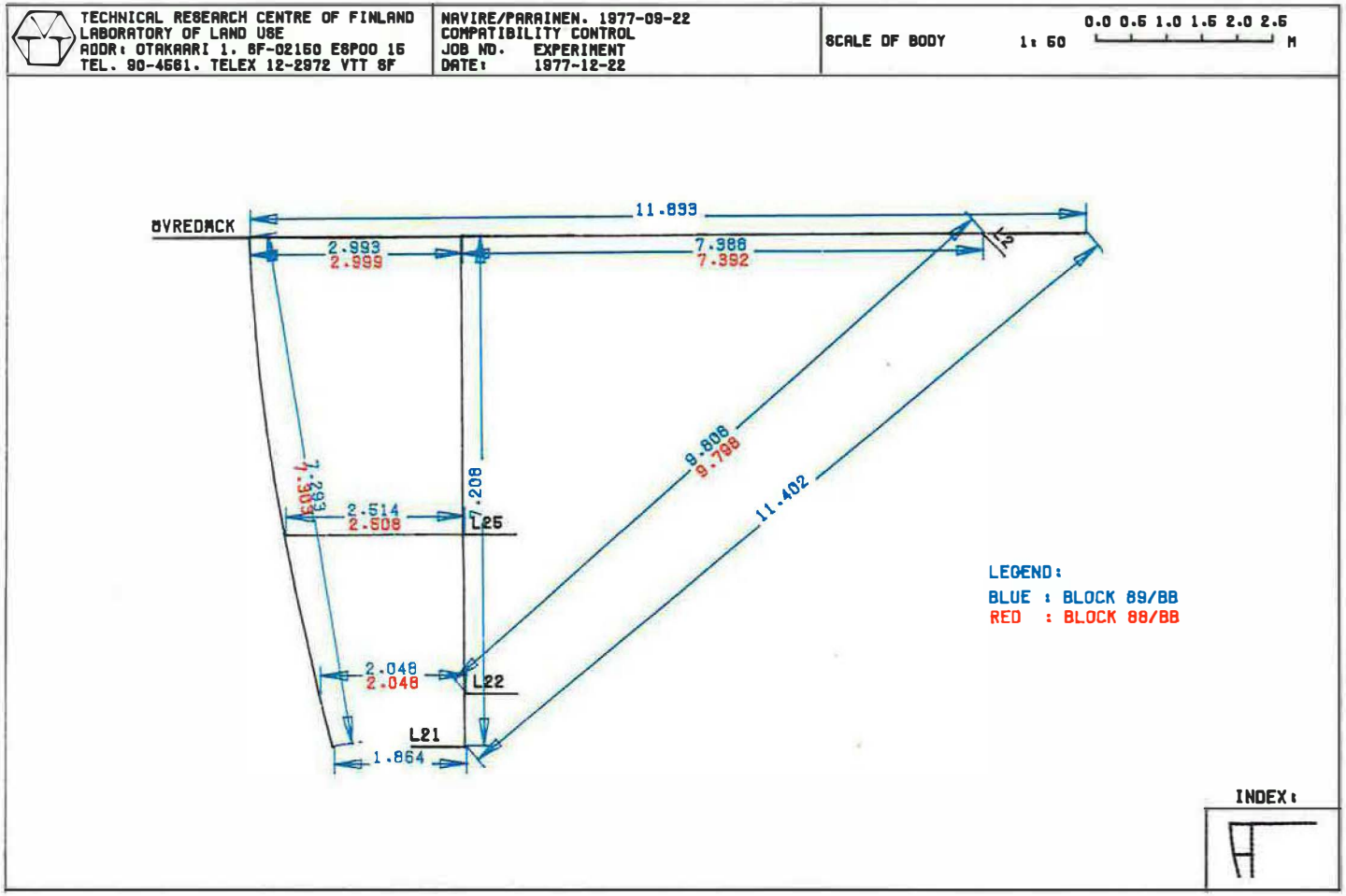

Fig. 8. The graphical presentation of the compatibility of blocks in the experiment work. The comparison presented as distances between position points. The whole blocks.

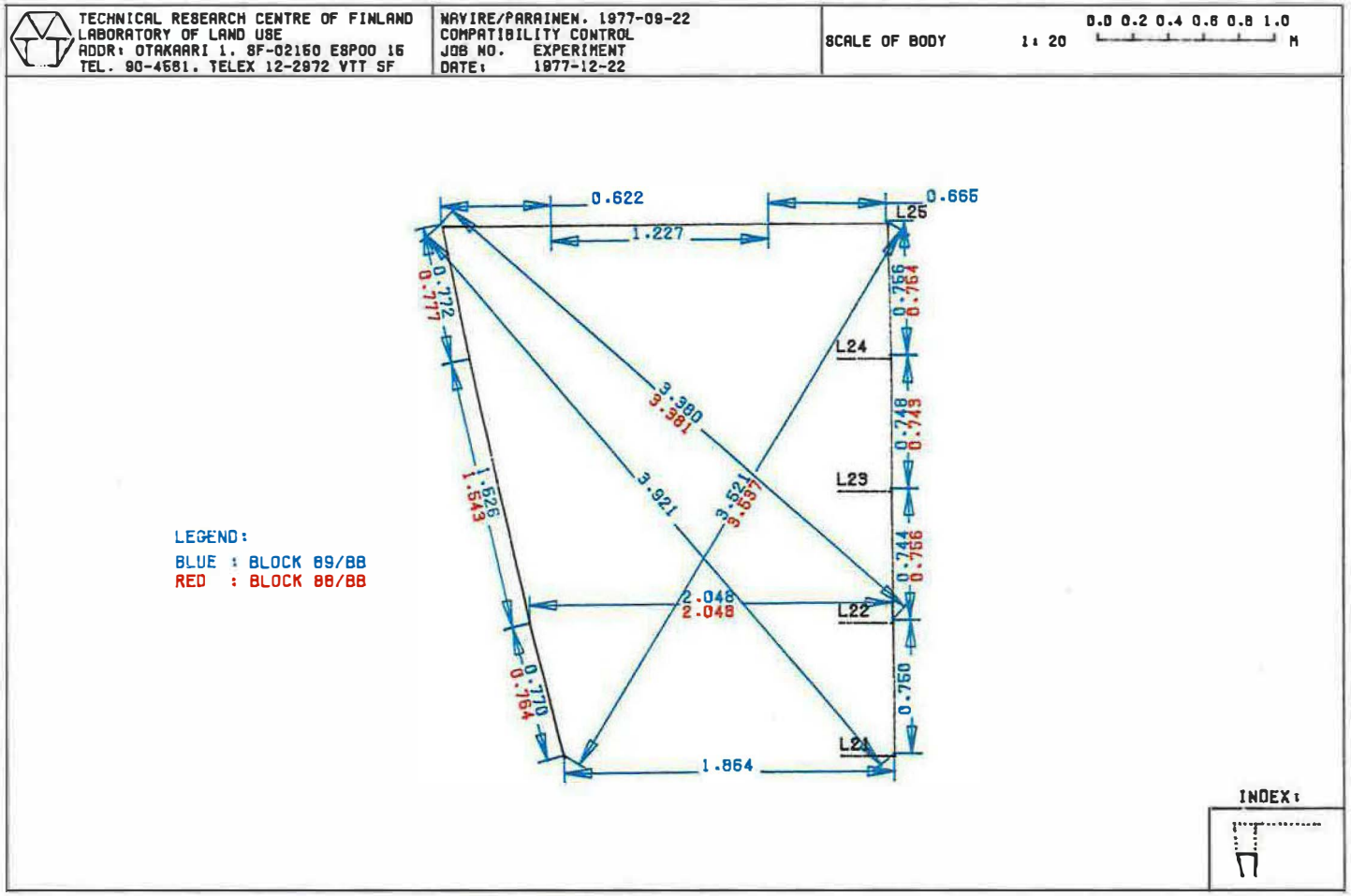

Fig. 9. The graphical presentation of the compatibility of blocks in the experiment work. The comparison presented as distances between position points. A part of the blocks.

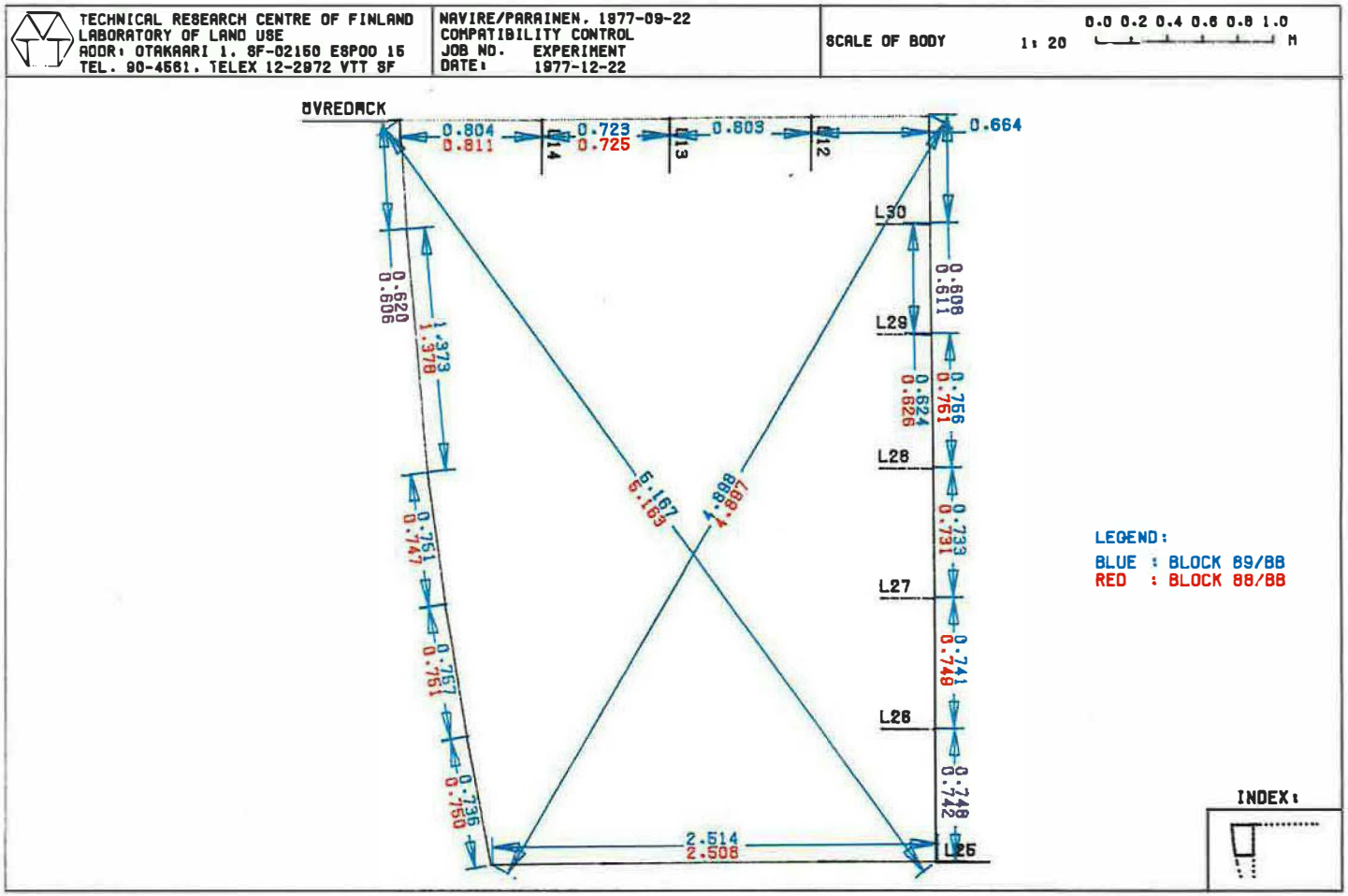

Fig. 10. The graphical presentation of the compatibility of blocks in the experiment work. The comparison presented as distances between position points. A part of the blocks.

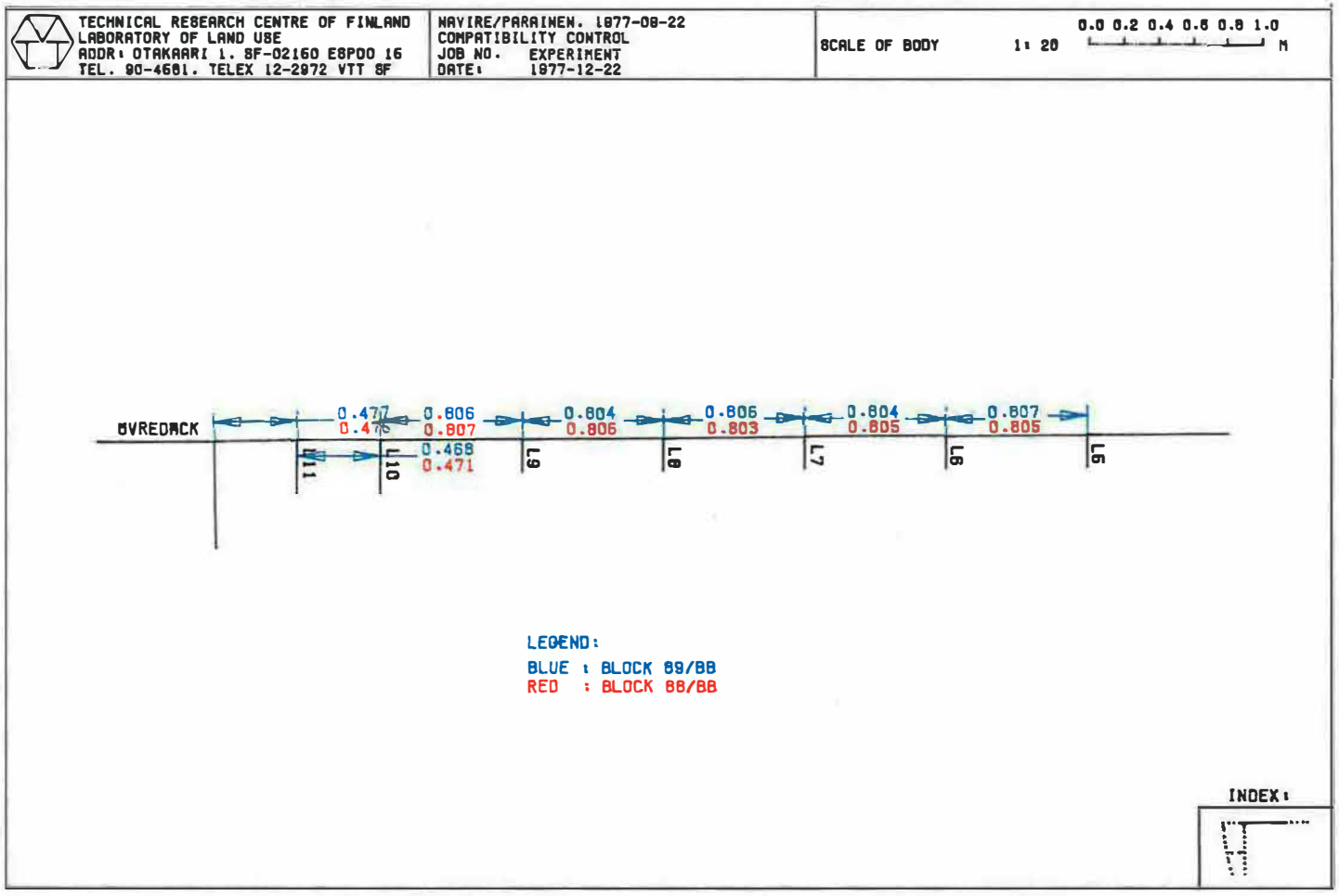

Fig. 11. The graphical presentation of the compatibility of blocks in the experiment work. The comparison presented as distances between position points. A part of the blocks.

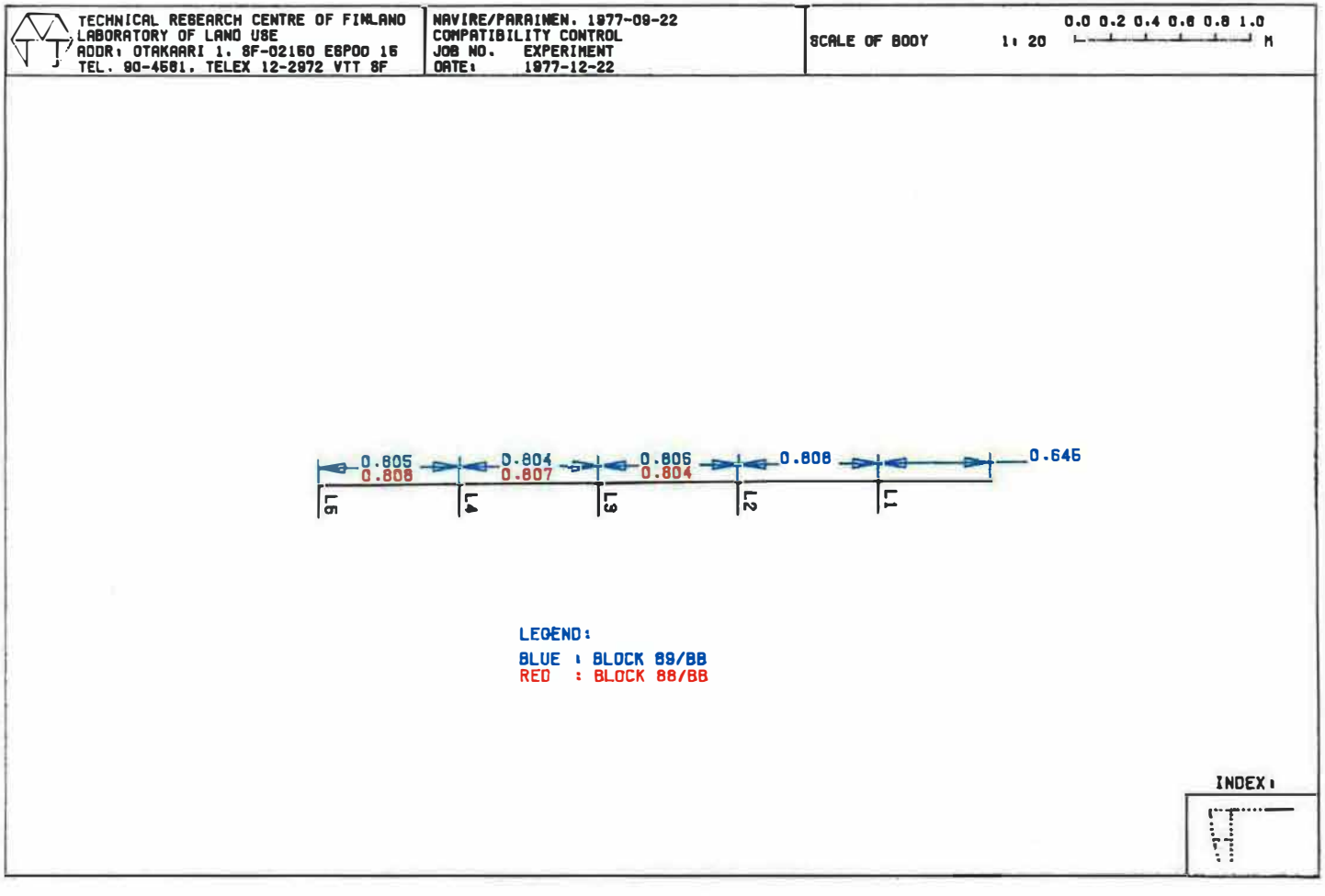

Fig. 12. The graphical presentation of the compatibility of blocks in the experiment work. The comparison presented as distances between position points. A part of the blocks.

5. SUMMARY

The measuring method which was developed in the research project was tested in the course of the experiment work and proved to be applicable to control measurements of ship constructions. The expectations and requirements incurred in experiment works carried out earlier at docks were taken into account when the method was designed. Among these viewpoints were the accuracy and readability of the results and the costs caused by the measuring work to the dock. A remarkable cost factor, while using conventional measuring methods, is the disturbance caused by measuring work to the normal operation of the dock itself. In the measuring method here reported, the time needed at the dock has decreased as a major part of the measuring work can be done outside the dock. This again might cause some delay in getting the results. However, the delay is only apparent, if it has been possible to present the decision makers with more applicable results through the use of graphical presentation.

Although the experiment work dealt with problems in controlling shipblocks, both the measuring method and the general three-dimensional adjustment and graphical software are suited for the definition of the shape and size of constructions with dimensions varying from 5 to 20 meters produced in building industry.

References

1. KENEFICK, J.F., Applications of photogrammetry in shipbuilding. Photogrammetric Engineering and Remote Sensing **43**(1977), pp. 1169...1175.

2. NEWTON, I., Close-range photogrammetry as an aid to measurement of marine structures. Photogrammetric Engineering and Remote Sensing **41**(1975), pp. 1501... 1512.

3. HOTTIER, Ph., Accuracy of close-range analytical restitutions: Practical experiments and prediction. Photogrammetric Engineering and Remote Sensing **42**(1976)3, pp. 345...375.

4. WONG, K.W., Mathematical formulation and digital analysis in close-range photogrammetry. Photogrammetric Engineering and Remote Sensing **41**(1975) 11, pp. 1355... 1373.

5. Rakenteen muodon ja koon mittaus, menetelmäkuvaus. Valtion teknillinen tutkimuskeskus, koestusmenetelmärekisteri, 1977. *Measurement of shape and size of construction, description of method. Technical Research Centre of Finland, Register of test methods, 1977.*

6. Fotogrammetristen ja geodeettisten havaintojen yhteistasoitus (GAPGO), ohjelmaseloste. Valtion teknillinen tutkimuskeskus, teknismatemaattisten ohjelmien ohjelmatietorekisteri, 1977. *General adjustment of geodetical and photogrammetrical observations (GAPGO), program abstract. Technical Research Centre of Finland, Program abstract register of technomathematical programs, 1977.*